# Prospects for Biochar in a Bio-Waste Cascade

(Möglichkeiten für Pflanzenkohle in einer Bioabfall-Kaskade)

Dissertation
(kumulativ)

zur Erlangung des akademischen Grades
Doktor-Ingenieur
an der Fakultät Bauingenieurwesen
der Bauhaus-Universität Weimar

vorgelegt von

Dipl.-Forsting. (FH) Daniel Meyer-Kohlstock M.Sc.
(interner Doktorand)

aus Merseburg

Gutachter:

1. Prof. Dr.-Ing. Eckhard Kraft (Bauhaus-Universität Weimar)
2. Prof. Dr.-Ing. Martin Kranert (Universität Stuttgart)
3. Prof. Dr.-Ing. Kerstin Kuchta (Technische Universität Hamburg)

Tag der Disputation: 14.07.2017

Bauhaus-Institute for Infrastructure Solutions (b.is)
Chair of Biotechnology in Resources Management

https://www.uni-weimar.de/bis

# Preface

In the past 15 years, renewable energies experienced an immense boom in Germany. A considerable proportion of its growth was based on the conversion of renewable raw materials. While fundamental questions about conversion technologies have been the focus of much inquiry, availability, climate relevance, energy efficiency, and overall economic reasonability are becoming more important. The potential of biomass in Europe is immense and require sensible use.

Against the background of decreasing soil fertility, the products of composting and fermentation from organic residues offer a suitable secondary fertilizer and soil improver.

At the same time, soil improvement by biochar has been scientifically researched intensively for more than a decade. The origin of this work has been the fact that the black soil (Terra Preta) anthropogenically produced in the Amazon Basin, which was already produced before the arrival of Columbus, has a high soil fertility. At the same time, the use of biochar offers the possibility of storing the incorporated carbon over longer periods, depending on the prevailing boundary conditions. Positive effects can be derived in connection with global warming (carbon sequestration).

Daniel Meyer-Kohlstock's research starts by investigating how novel material streams can be integrated into the systems of the bio-waste industry. It uses biochar as an example, and focuses on the cascade utilization of this material stream. In addition to material flow and energy balancing, the legal and economic framework conditions and impacts are considered in order to elaborate scientifically based statements on the use of biochar in the bio-waste industry.

The merit of Mr. Meyer-Kohlstock's material flow and energy analysis is to evaluate the effects and feasibility of the use of biochar in the process chain of bio-waste treatment, and provide a comparative analysis of scenarios for the cascade utilization of bio-waste. A comprehensive survey of composting plant operators closes a relevant knowledge gap in the field of compost. The result shows the tension between economic reality and political rhetoric on climate protection and energy efficiency. Nevertheless, this work raises the possibilities and influence of legislation, e.g., in the area of recycling rates. This part of the work is of substantial importance, as it develops and presents opportunities for the collection of organic waste that take into account the differentiated recognition and rating of different collection systems. Recommendations for the extension of legislation are given and can also be derived from the data. The results are an excellent basis for the expansion of cascade utilization and the implementation of the promising use of biochar in the bio-waste industry. The work is an important scientific contribution to a complex issue of environmental and macro socio-economic policy.

Prof. Dr.-Ing. Eckhard Kraft

For the reader.
I hope you find something useful in here.
If you do, you can take it, work with it, and share it.

# Contents

# List of Figures

# List of Tables

# Abbreviations

| | |
|---|---|
| A | ash |
| AD | anaerobic digestion |
| AT | Austria |
| | |
| BE | Belgium |
| BG | Bulgaria |
| BGK | Bundesgütegemeinschaft Kompost e.V. |
| BMU | Bundesministerium für Umwelt, Naturschutz und Reaktorsicherheit |
| | |
| C | carbon |
| Ca | calcium |
| CBA | cost-benefit analysis |
| 🅭🅯 | Creative Commons license with attribution |
| 🅭🅯🅮 | Creative Commons license with attribution and share alike |
| Cd | cadmium |
| CH | Switzerland |
| ch | chemical energy |
| $CH_4$ | methane |
| CHP | combined heat and power |
| C:N | carbon-to-nitrogen ratio |
| $CO_2$ | carbon dioxide |
| Cr | chromium |
| CSV | comma separated values (data exchange format) |
| Cu | copper |
| CY | Cyprus |
| CZ | Czech Republic |
| | |
| DE | Germany |
| DK | Denmark |
| DM | dry matter |
| | |
| EBC | European Biochar Certificate |
| ECHA | European Chemicals Agency |
| EE | Estonia |
| EEG | German Renewable Energy Act |
| EL | Greece |

| | |
|---|---|
| el | electric energy |
| ES | Spain |
| EU | European Union |
| Eurostat | Statistical Office of the European Union |
| EWC | European Waste Catalogue |
| | |
| FC | fixed carbon |
| FI | Finland |
| FLOX | flameless oxidation |
| FM | fresh matter |
| FP7 | 7th Framework Programme |
| FR | France |
| | |
| GCV | gross calorific value, also known as higher heating value (HHV) |
| GHG | greenhouse gases |
| GIS | geographic information system |
| | |
| H | hydrogen |
| $H_2O$ | water |
| HDPE | high density polyethylene |
| Hg | mercury |
| HHV | higher heating value, also known as gross calorific value (GCV) |
| HR | Croatia |
| HTC | hydrothermal carbonization |
| HU | Hungary |
| | |
| IBI | International Biochar Initiative |
| IE | Ireland |
| ISO | International Organization for Standardization |
| IT | Italy |
| | |
| K | potassium |
| $K_2O$ | potassium oxide (equivalent to indicate the potassium content) |
| | |
| LaTeX | document preparation system based on TeX |
| LAU | local administrative unit |
| LCA | life cycle assessment |
| LHV | lower heating value |
| LSU | live stock unit |
| LT | Lithuania |
| LU | Luxembourg |
| LV | Latvia |

| | |
|---|---|
| MEFA | material and energy flow analysis |
| MFA | material flow analysis |
| Mg | magnesium |
| MIPS | material input per service unit |
| MS | member state (of the European Union) |
| MSW | municipal solid waste |
| MT | Malta |
| | |
| N | nitrogen |
| $N_2O$ | nitrous oxide |
| Ni | nickel |
| NL | Netherlands |
| NPK | nitrogen, phosphorus, potassium |
| NUTS | Nomenclature des Unités Territoriales Statistiques |
| | |
| O | oxygen |
| ODM | organic dry matter (in $\%_{DM}$) |
| OECD | Organisation for Economic Co-operation and Development |
| OFMSW | organic fraction of municipal solid waste |
| | |
| P | phosphorus |
| $P_2O_5$ | phosphorus pentoxide (equivalent to indicate the phosphorus content) |
| PA | proximate analysis |
| Pb | lead |
| PDF | portable document format |
| PGF | portable graphics format |
| PL | Poland |
| PT | Portugal |
| | |
| QAS | quality assurance system |
| QGIS | Quantum GIS (software for geographic information systems) |
| | |
| REACH | European Regulation concerning the Registration, Evaluation, Authorisation and Restriction of Chemicals |
| RO | Romania |
| | |
| S | sulfur |
| SE | Sweden |
| SEP | Swiss ecopoints |
| SI | Slovenia |
| SK | Slovakia |
| SPI | sustainable process index |

| | |
|---|---|
| TEX | typesetting system |
| th | thermal energy |
| Ti*k*Z | programming language for graphics |
| TOC | total organic carbon |
| | |
| UA | ultimate analysis |
| UK | United Kingdom |
| UTM | Universal Transverse Mercator projection |
| | |
| VM | volatile matter |
| | |
| WFD | Waste Framework Directive |
| WWF | World Wide Fund for Nature |
| | |
| Zn | zinc |

# 1 Biochar as Part of Bio-Waste Recycling

## 1.1 Scope and Aim

Biochar is carbonized biomass, like charcoal, that is applied as a soil improver. This technology is mostly investigated from a soil science perspective or from a climate mitigation perspective because of its carbon sequestration potential. But the origin of biochar research is closely connected to bio-waste recycling.

The idea of biochar emerged from the investigation of *„Terra Preta de Índio“*, a pre-Columbian, anthropogenic black soil of the Amazon basin. Compared to the surrounding, highly weathered, natural soils, Terra Preta is very fertile. The main reason for this is that it contains large amounts of carbonized biomass, *i.e.*, biochar. However, this soil also contains considerable amounts of clay shards, bone fragments, and other organic residues [Glaser et al., 2001]. This has led to the conclusion that Terra Preta originated in refuse pits, which were later combined with home garden agriculture [Glaser and Birk, 2012; Schmidt et al., 2014b]. This intelligent material flow management helped to sustain at least eight million people before the European conquest began in 1492 [Clement et al., 2015], in contrast to less than 200 000 in the early 1980s [Park, 2002, p 108].

Germany, with its population of around 82 million, manages its organic refuse differently from the pre-Columbians of the Amazon. The spatial separations of production and consumption of food and other organic products require sophisticated management in order to close the organic material cycles. This is accomplished by collecting bio-waste and green waste separately [Destatis, 2015], and recycling it in central composting plants. Germany collects and recycles around nine million tons of bio-waste and green waste annually. The resulting compost is then applied in agriculture, gardening, and landscaping. In addition, around 1.9 million tons of the collected bio-waste is used, prior to composting, in biogas plants to produce power and heat [Kern and Raussen, 2014]. This amount is likely to increase in the coming years [Rauh, 2016].

The question arises: could biochar technology, with its roots in bio-waste management, further improve this advanced bio-waste cascade of energy and material recycling? In the last ten years, more than 2 000 scientific papers have been published on biochar [Scopus, 2016]. Several of these papers concerned biochar as an additive to agricultural composting that reduced carbon and nitrogen emissions and, in turn, increased the nutrient contents of the compost. A similar approach to bio-waste composting was addressed only recently, by Lü et al. [2015], Kraus et al. [2015], and Vandecasteele et al. [2016]. Consistently, the few companies in Europe that produce biochar-compost, like Sonnenerde (AT), Swiss Biochar (CH), Carbon Gold (UK), and Palaterra (DE), do not use bio-waste as input material.

In regard to biochar as an additive for bio-waste-to-biogas plants, there are no publications at all. However, there have been reports of promising results of increased biogas yields for the anaerobic digestion of agricultural substrates, e.g., by Kumar et al. [1987], Inthapanya and Preston [2013], and Rödger et al. [2013]. Given these first positive results and the extensive bio-waste management in Germany, it seems reasonable to investigate the possible integration of biochar into the current bio-waste cascade.

As implied before, the current cascade starts with the anaerobic digestion of bio-waste into biogas for power and heat. In the second step, the remaining digestate is composted together with green waste as necessary bulking material. In the third and final step, the compost is applied to soil: fresh compost with quick nutrient availability is used mostly for agriculture, and matured compost mostly for gardening and landscaping.

To produce the required biochar for an extended cascade, a dry carbonaceous material would be ideal. This would allow for an energy efficient pyrolysis, *i.e.*, a thermochemical decomposition of the material under heat and lack of oxygen, whereby the released gas is burned to maintain the heat and possibly generate more. The most appropriate substrate, in this case, would be a share of the green waste. This comes with a double benefit since it does not reduce the biogas feedstock and the biochar can act as bulking material in composting as well.

While some of the biochar could be applied directly to composting, it would make sense to apply the full amount to anaerobic digestion only. All biochar would then enter composting as part of the digestate, which would reduce the application steps from two to one. Since biochar is a very stable material, it should be able to fulfill its reported positive functions in composting even after its duration in anaerobic digestion.

Based on these considerations, the proposed integration of biochar into the existing bio-waste cascade is depicted in Figure 1.1. In addition, this figure shows the main areas that are investigated.

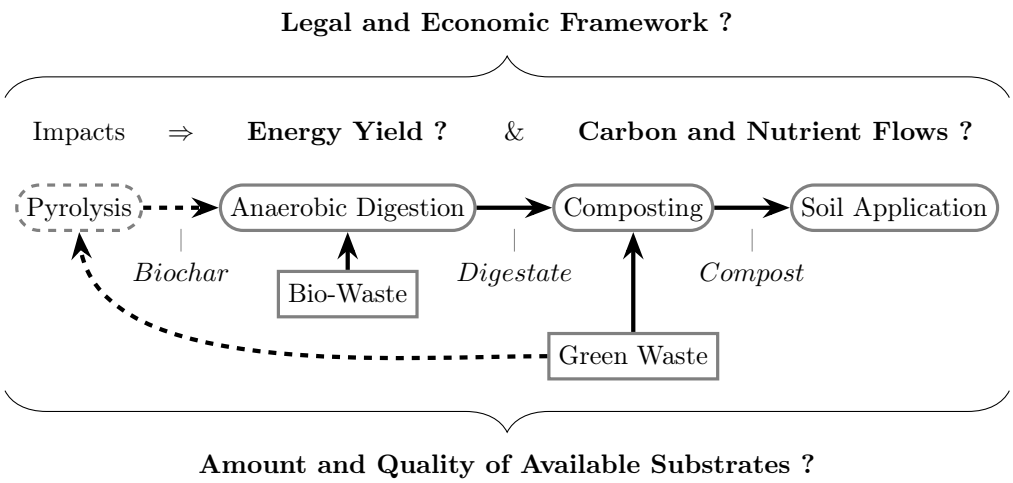


Figure 1.1: Existing bio-waste cascade and proposed pyrolysis step (dashed), as well as investigated impacts and frameworks (bold).

The selection of the examined areas in Figure 1.1 is based on the intention to investigate the biochar-enhanced cascade holistically. This shall allow a concise assessment of its overall viability and identification of the measures that are necessary to make it viable. The following points specify the examined areas and explain how they relate to each other and why they are necessary:

- **Research Methods**: For the investigation of the subsequent areas, it is crucial to first identify the most appropriate research methods and, if such methods are not available, to modify or newly develop them.
- **Legal and Economic Framework**: Before any technical issues or ecological impacts are considered, the circumstances responsible for the existing bio-waste management are investigated. Only when the status quo is understood will it be possible to assess any potential changes. The specific research questions are: How does the legal and economic framework support bio-waste management and would it promote further improvements?
- **Amount and Quality of Available Substrates**: Provided that the legal and economic framework would fully support the enhanced cascade, its impact would be directly proportional to the available amount of organic waste. Of course, this theoretical potential would then be reduced to a technical one, depending on the quality of these substrates. It is necessary to investigate how this quality is influenced, how much organic waste is available, and how much is already being used.
- **Energy Yield**: The improvement of the enhanced cascade depends partly on the question of whether biochar can raise the energy yield in the anaerobic digestion of bio-waste. Since no published research on this question is available, an experimental investigation is undertaken.
- **Carbon and Nutrient Flows**: The other part of the possible improvements that can be made by the cascade are the ecological impacts of its material flows. Leaving aside water and unwanted contaminants, these consist mainly of carbon (or carbon compounds) and nutrients. To assess their ecological impact, it is necessary to analyze these flows.
- **Assessment of the whole cascade**: Based on the investigated flows of energy, carbon, and nutrients, the ecological and energetic performance of the whole cascade is assessed. In addition, the viability of the proposed cascade is evaluated, based on the previous insights into the legal and economic framework, as well as on the identified amounts and qualities of available substrates.

The outcome of any assessment depends strongly on its underlying emphases. Therefore, the following sections outline these and explain why they were chosen.

## 1.2 Ecological Impacts

Although the investigation of the proposed cascade starts with the legal and economic framework, the core question of this work is: **Can the implementation of biochar improve the ecological impacts of the current bio-waste recycling?** This question comes first because any social and financial aspects can only be relevant if they are embedded in an environment that can sustain them, at least in the long term. In turn, these latter two aspects, which nonetheless are of major importance, should promote or at least not damage a sustaining environment.

Such a prioritization in the order:

1. Environment,
2. Social considerations (including the legal framework), and
3. Economy (Finances),

which is sometimes called ecological economics [Litaer et al., 2012, p 30], is not entirely new. However, it differs from the widespread approach used by OECD [2000, p 109], which allows parts of social and financial aspects to act uncoupled from each other and the environment. As depicted in Figure 1.2, the ecological economics approach ensures that the environmental and social contexts can never be left out.

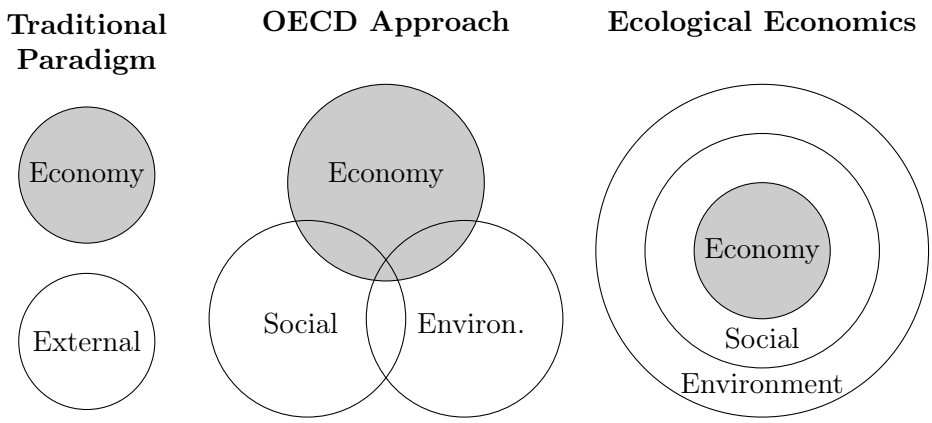


Figure 1.2: Relation of economic, social, and environmental aspects based on varying concepts (based on Litaer et al. [2012, pp 28–33]).

The approach of ecological economics is chosen for this investigation because the OECD approach tolerates, along with their partly pure economic and pure social areas, the externalization of environmental and social aspects. This approach does not stray far from the traditional paradigm of economics, which is visualized in Figure 1.2 as well. This paradigm includes, on the one side, the use of free ecological services like water and air, and the use of infrastructure provided by society. On the other side, and in the worst case, it includes the right to pollute water and air at no charge, or to profit from low taxes and poverty wages. It is necessary to point out these issues, because the traditional paradigm

is still very common in economics and the decision to implement new technologies or methods is mostly based on financial considerations. Of course, the legal framework can provide regulations that restrict such externalizations, if demanded by the public.

One aim of waste management in Germany is to recycle carbon and nutrients from separately collected organic waste. The recovered materials, in the form of compost, can then substitute mineral fertilizer produced from non-renewable resources, e.g., nitrogen from natural gas or phosphate from phosphate rock. They can also substitute peat moss, which is still used at an unsustainable rate for planting substrates. In addition to this material recycling, and as mentioned before, several composting facilities include biogas reactors, which recover energy from organic waste before composting. Since this energy is originally solar radiation transformed by photosynthetic organisms into chemical energy, it is a form of renewable energy, suitable as a substitute for fossil fuels like coal and natural gas.

All in all, this kind of combined material and energy recovery from bio-waste makes a good first impression. Indeed, it is not surprising that several studies have found this approach to be more ecologically sound than pure energy recovery by incineration [Schott et al., 2016]. Hardly necessary to mention are the ecological benefits of this approach compared to landfilling with its very high emissions of greenhouse gases (GHG). Nonetheless, if only GHGs are accounted for, it is possible to arrive at a better performance for landfill gas capture and use than for composting without energy recovery [Brown, 2016]. However, such an approach would ignore other factors, like the value of organic material for soil [Montgomery, 2008]. This issue refers to the question of how ecological impacts can be assessed adequately, which is approached in Section 2.4.1, which discusses methods used to assess material flows.

## 1.3 Legal Framework

After the ecological impacts are determined, it is time to ask: **How does the cascade fit into the existing legal framework?** An important part of this framework is the waste hierarchy, set out by §4 of the Waste Framework Directive (WFD) [2008/98/EC], and depicted in Figure 1.3 on the following page. The highest priority, in this hierarchy, is the prevention of waste, followed by re-use, recycling, other recovery, and disposal.

This legal hierarchy is based on environmental considerations. If waste is prevented, no emissions occur, either during collection or after disposal. If waste is recycled, some emissions and some loss of resources still occur, but the recovered material or energy can be substituted for other resources. Finally, if waste is safely disposed of, negative environmental impacts are reduced, but all potential resources are lost.

Despite these environmental aspects, the hierarchy also reflects societal costs, since the social and economic realm are part of the environment. While the disposal of waste could, in the short term, appear as the most viable solution in financial terms, it would raise the societal costs. Resources would be lost and emissions would burden valuable ecological functions and threaten environmental and human health. At the other end of the hierarchy, if no waste is produced, this would emulate the efficiency of nature itself.

Questioning the highest priority of the waste hierarchy, it could be argued that the prevention of organic waste makes no sense; since it can be fully returned to the agricultural production, *i.e.,* the cycle would be closed. However, our industrial agricultural practices require large amounts of fossil energy and are accompanied by ecological degradation [Clunies-Ross and Hildyard, 2013]. In addition, recycling operations are not entirely free of negative environmental impacts. Therefore, prevention of organic waste, specifically of food waste, would avoid a lot of costs for society. Despite this fact, the implementation of food waste prevention is hampered by many factors [Canali et al., 2014], that make a substantial reduction of organic waste flows in the near future unlikely. However, even if reduction measures were to be successful, this would only reduce the amount of organic waste, not eliminate it completely. Therefore, prevention and preparation for re-use are of no concern for the investigation of the proposed cascade.

Recycling and other types of recovery, the subjects of the investigated cascade, are located in the middle of the hierarchy. Although recycling has a higher priority than other types of recovery, which includes energy recovery, the latter can be preferred if it is the better ecological solution (according to number (7) of the WFD introduction). As mentioned in the prior section, the level of ecology depends on one's chosen perspective. Therefore, substituting energy from organic waste for fossil energy can have the same priority as recycling the waste into organic fertilizers. Within this investigation, this flexible view is accepted as status quo. It also poses no conflict of objectives, since biochar shall likewise improve the energy and material recovery within the existing system.

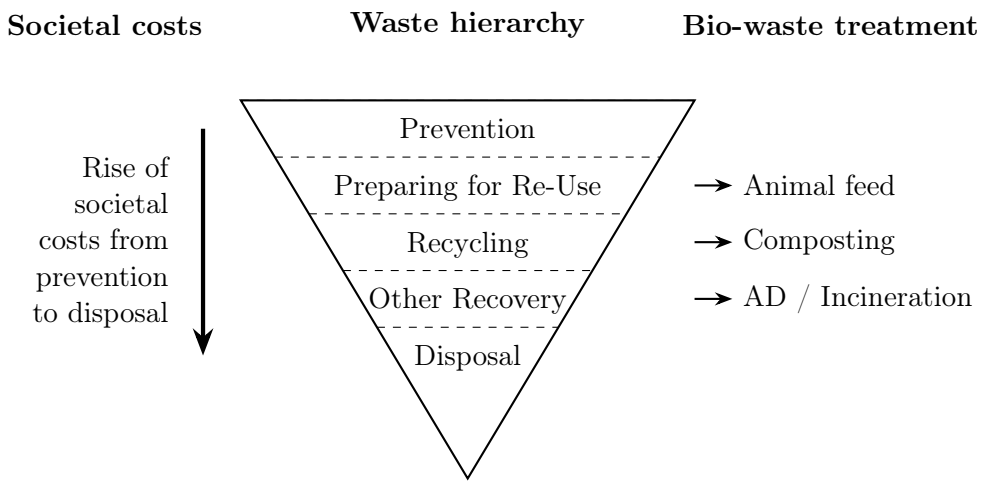


Figure 1.3: Waste hierarchy (according to §4 WFD [2008/98/EC]), corresponding bio-waste treatments, and general direction of societal costs.

For a realistic assessment of the cascade, it is not only necessary to know how it fits into the legal framework. It is likewise important to know how successful this framework currently is, which in the end depends on the resulting financial viability.

## 1.4 Financial Viability

The possible implementation of the cascade should be based on ecological benefits and on an agreement with the legal framework. However, there is always more than one way to support improvements in regard to environmental aspects. The question is: **Can the cascade be a financially viable option to improve the environmental impacts of bio-waste recycling?** This is an economic question, and the answer can easily be compared with the investigation of other solutions, *i.e.*, can the same benefits be achieved with a more cost-effective solution?

To answer this question, it would be useful to take a step back and compare the overall costs of waste management with those of other human activities. Figure 1.4 provides an overview of the total waste management costs in relation to the available household income. The numbers are around 15 years old, but the specific ratio between disposable income and cost for waste management should be about the same as it is today. Considering that the subset of organic waste recycling costs only a fraction of this half percent, the question arises: Are these costs are of any importance at all? Nonetheless, within waste management, the issue of the most cost-effective solution remains and has to be addressed.

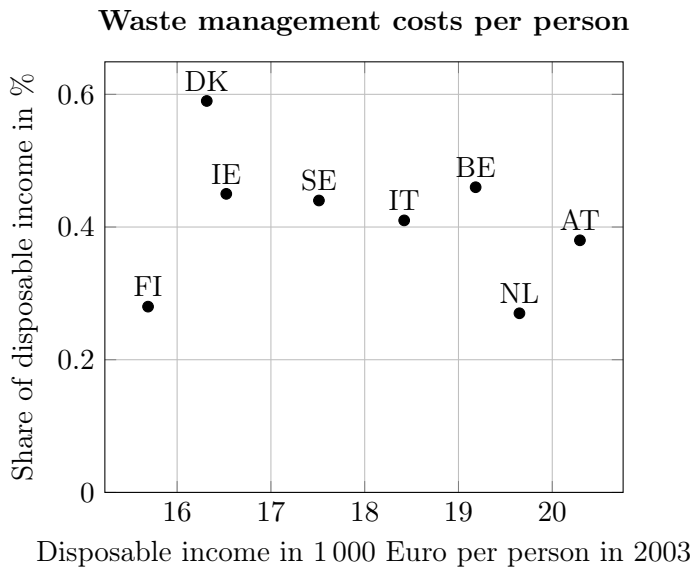


Figure 1.4: Waste management costs per person in eight EU member states (based on Hogg [2002, A52–A71]) in relation to the real adjusted gross disposable income of households per person (based on Eurostat).

It can be difficult to compare financial costs and benefits of certain technologies, especially if they are still in development. However, it gets even more interesting when the net benefits (or losses) have to be compared with the envisioned goals, in this case with ecological improvements. As mentioned before, it is already a challenge to

realistically assess the ecological impacts of a technology. Nonetheless, it is the aim of this investigation to provide exactly these assessments and to do so in a concise manner. The necessary methods are discussed in Section 2.4.2, while the financial costs and benefits are investigated in Section 7.3.

# 2 Research Methods

The interdisciplinary investigation of the cascade, and with it its assessment, require the use of several methods. The first part of this chapter provides an overview of these methods, which were applied to investigate specific aspects of the cascade. The second part deals with the adaption of a material flow analysis (MFA), and a subsequent evaluation of the results, to assess the proposed cascade in full.

## 2.1 Questionnaires – Asking Operators

One of the most important steps of the cascade is the composting of bio-waste. While composting plants seem to be successful in converting waste into a valuable soil conditioner and fertilizer, it is important to understand how they work, technically, legally, and economically. Otherwise, a realistic assessment of a cascade based on these plants would hardly be possible.

To collect the required data for the results in Chapter 4 "The Value of Composting in Germany," a questionnaire was developed. During that time, in 2010, online survey services were not as common as they are today, even though the method itself had already been based on empirical evidence and scientifically researched (see Couper [2008]). Therefore, a questionnaire based on fillable forms in a portable document format (PDF) was created in two steps using OpenOffice Writer and Acrobat Distiller. The PDF-file was sent by e-mail to all 440 compost plants certified by the Federal German Compost Quality Assurance Organization (BGK). The 59 plant operators who took part in the survey could either fill out the form and send the data back by e-mail, or print the file and fax or post it back. Only six operators used one of the latter two options. The first option had the advantage that all data files could be directly transferred into one CSV-file, which could be further processed with any spreadsheet software.

Figure 2.1 on the following page provides an overview of the content of the three-page questionnaire. The questions were grouped into several sections, beginning with the contact information and ending with details about handling the data. The quantity of information that could be collected with the questionnaire may seem rather extensive, considering the 80 data fields and 97 tick boxes. However, these large numbers are necessary to account for the variety of composting plants. Only a fraction of these fields and boxes is necessary to describe any specific plant according to the aim of the survey.

In addition to the general overview of German composting plants, the survey aimed at the identification of deficits in energy efficiency and how they could be eliminated. For this reason, the energy section on the second page is very specific, down to single units, as it is for the composting aeration and the material preparation, to name two examples.

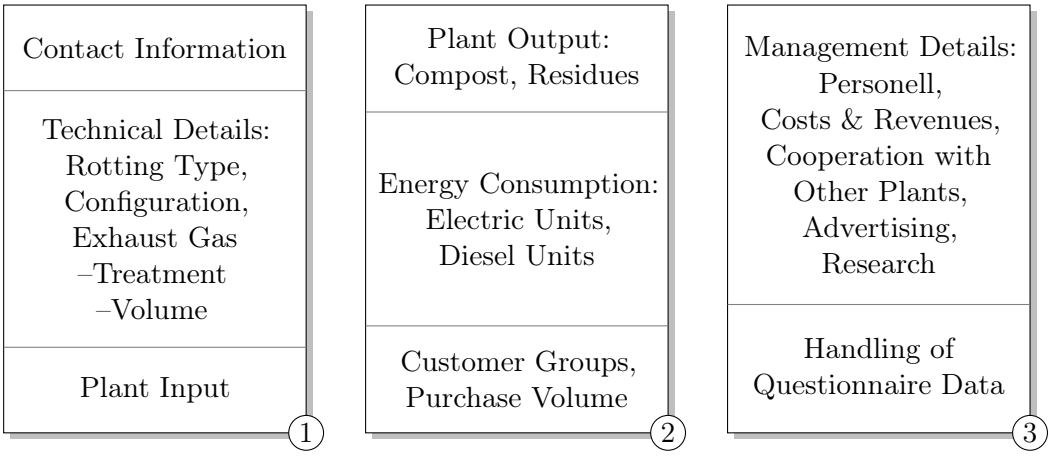


Figure 2.1: Developed questionnaire with general contents of its three pages.

As in the other sections, it is possible to provide more general information, such as the total energy consumption, if detailed data is missing. Because most composting plants calculate only the total electric and diesel consumption, this option was used rather often.

As described in Chapter 4, the survey yielded enough responses to draw certain conclusions. However, survey research is a social science method with specific challenges. How well the goal of a survey can be accomplished depends, according to Fowler [2014], on three questions:

1. How is the sample of the whole selected?
2. Which questions are asked?
3. In which way are the answers collected?

In this case, the first question is easy to answer. For practical reasons, all BGK members were asked to participate, because the respective contacts were readily available. This was not the case for the rest of Germany's composting plants, however, but the remaining plants are only responsible for around 25 % of the total composting throughput. As a result, the selected sample was quite large and can be seen as representative of bio-waste composting in Germany.

The third question was already answered above. However, it could be asked whether this questionnaire was the most appropriate mode of survey. At least for the surveyors, it was the most economical one, and none of the respondents suggested any improvements. Of course, the operators who did not respond could have had some suggestions. However, the reasons for a non-response are more likely to be found in the second question.

The questionnaire includes sensitive questions in regard to the technical and economic efficiency of the composting plant. For various reasons, plant operators might not want to disclose their respective data. According to Tourangeau and Yan [2007], sensitive questions can have three consequences:

- Reduced overall, or unit, response rates.
- Reduced specific, or item, response rates in regard to certain questions.
- Reduced accuracy of the responses, *i.e.*, reduced truthfulness of the answers.

In this case, sensitive questions should only have led to reduced unit and item response rates, since it was explicitly communicated that omissions are allowed. In addition, there should have been no motivation to falsify data, since the provided information was analyzed anonymously.

This leaves only common problems, such as respondents who misunderstood questions, could not retrieve all relevant information, or inaccurately estimated their answers. However, the questionnaire was developed in such a way as to avoid these issues as far as possible, by asking precise questions from engineer to engineer.

## 2.2 Statistics – Turning Data into Findings

This section discusses the geographic compilation of statistical data in order to create a more realistic picture of the status of bio-waste recycling in the EU, which can be found in Chapter 5 "Organic Waste for Compost and Biochar in the EU." Although the Statistical Office of the European Union (Eurostat) provides various data on this issue, they are somewhat scattered. Data are provided for different geographic regions, depending on what the statistical offices of the EU member states delivered. A nearly complete picture for the whole EU is currently only available at the national level [Eurostat]. Regional and local data are not sufficiently comprehensive to provide a whole picture. This also includes certain investigations of specific urban areas. In addition to this geographical imbalance, several data sets are only available for specific years.

All these data fragments together could provide a more realistic picture of the diversity of recycling rates within the EU. This has implications in regard to policy recommendations about the best way to improve them. The question could be, should a transfer of technology and organization be based on overall national achievements or on experiences from the regional and local levels? If there is high diversity within EU member states, then the latter should get a higher priority, *i.e.*, learning from the best solutions in the neighborhood.

In order to link geographical information with the scattered statistical data, it is necessary to have a common nomenclature. For the investigated area, the EU, this is provided by the Nomenclature of Units for Territorial Statistics (NUTS). NUTS is developed and maintained by the EU in order to provide conclusive statistics. It comprises three geographic levels for all EU member states, and each state is identified with level 0. In addition to NUTS, there are two lower levels of local administrative units (LAU), for such areas as counties and municipalities. NUTS regions are based on existing national subdivisions and their size depends on respective population sizes. This explains why, in Figure 2.2 on the next page, the map on the right side shows much smaller NUTS 3-regions for the densely populated Germany than for Sweden with its, in general, lower population density.

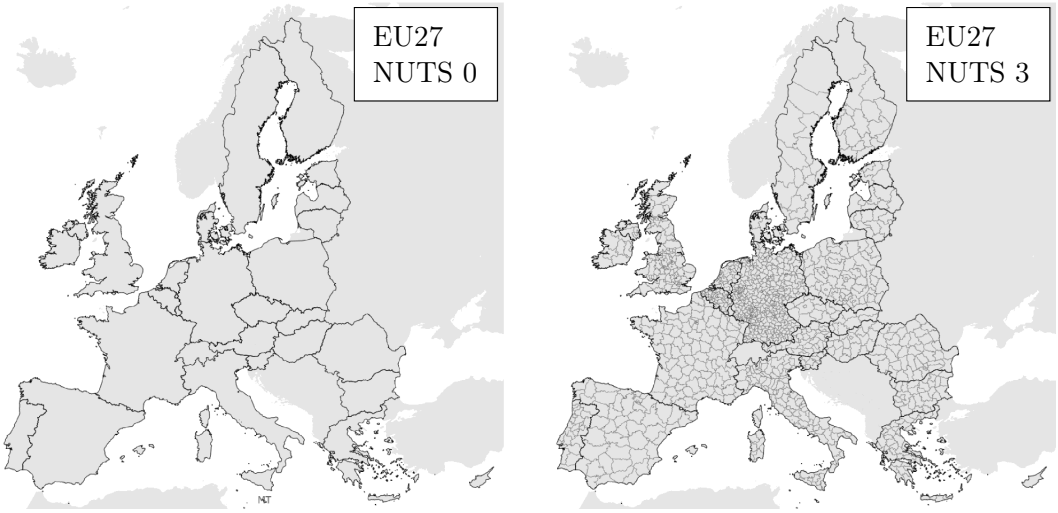


Figure 2.2: Two levels of the EU Nomenclature of Units for Territorial Statistics (NUTS) (based on data by Eurostat [2015]).

While some statistical data on bio-waste recycling are available for the highly detailed NUTS 3-level, others are only available for NUTS 2 or NUTS 1, or even just on a national level. Where possible, detailed regional data could complement statistics at the national level and the latter could fill gaps where the former are not available. The same method could be used at the temporal level, *i.e.*, substituting not available current data with data from former reporting periods. The question is, can such a mash up be a sound methodical approach?

Based on the fact that all maps distort reality, the answer might be yes. According to Monmonier [1996, p 5], every map contains the following sources of distortions:

1. Map scales
2. Map projections
3. Map symbols

The first source refers to the chosen scope of the map, which covers the whole EU. This choice has a great impact, since specific differences on the level of towns and small cities are not distinguishable on this large scale. It is a compromise between the big picture and accuracy.

The second source refers to the correct presentation of the surface area. Because of the transfer from a spherical surface to a plane map, distortions of the surface area occur, and these distortions can be quite heavy for large scale maps. In this case, the Universal Transverse Mercator (UTM) projection is applied to create the map. Through the UTM, areas closer to the poles appear larger than they are, although for the EU, the distortions are not too severe. The UTM was chosen because it is a commonly used projection and most people are familiar with maps based on it.

The third source refers to the representation of geographic and man-made features. What is included, what is not, and how should the data be visualized? In this case, these questions relate to the bio-waste recycling rates. All the prior points about the mash up of data apply here as well. Considering the aim of the map, to illustrate the regional diversity of recycling rates, the combination of scattered data should appear as a reasonable solution. In addition, the integration of data from different years was attempted not for the first time [Su and Hong, 2015].

The creation of this and the other maps in Chapter 5 was done with the open source software, Quantum GIS [QGIS, 2016]. Quantum was chosen because it is more user friendly than the, likewise open source, but more powerful, Geographic Resources Analysis Support System [GRASS GIS, 2016]. For the creation of the maps, QGIS provided all necessary tools, except for post-processing, which was done with the open source vector graphic editor Inkscape [2016].

## 2.3 Trials – Getting Relevant Data

The methods involving the trials of biochar in the anaerobic digestion (AD) of bio-waste are described in detail in Chapter 6 "Biochar as Additive in Biogas Production from Bio-Waste." The reason for simulating an industrial-scale biogas plant is provided there along with the increased relevance for the industry. However, the more fundamental reason, the pursuit of relevant data, is explained in the following.

The investigation of biochar in AD is based on two elements. First, biochar is not digested during the process because its main constituent is highly stable carbon. Second, biochar may positively affect the process by providing a large surface area, a relatively high pH, and possibly some micro-nutrients within its ash content. The large surface area, in particular, with its relevance for microbiology, should affect the process performance in simple batch tests differently than in continuously stirred operations.

Beside these specific considerations regarding biochar in AD, there is a general question regarding in what manner the results from laboratory trials can be transferred to full-scale plants. While these trials are the only viable option to investigate various improvements without risking the costly shut-down of a biogas plant, the amount of research on the transferability of the results is rather modest. Table 2.1 gives an overview of the published research and its main parameters.

Table 2.1: Investigations on the transferability of AD trials.

| **Source** | **Year** | **AD Type** | **Compared Volumes** | **Substrate** |
|---|---|---|---|---|
| Aivasidis and Wandrey | 1990 | continuous | 18 L / 3.4 $m^3$ / 1 200 $m^3$ | starch production effluent |
| Gallert et al. | 2003 | continuous | 8 L / 1 200 $m^3$ | bio-waste |
| Massé et al. | 2004 | batch | 42 L / 2.5 $m^3$ / 8 $m^3$ / 12 $m^3$ | pig manure |
| Brunn et al. | 2007 | continuous | 80 L / 4 600 $m^3$ | sewage sludge, slurry, fat |
| Bouallagui et al. | 2010 | continuous | 2 L / 5 250 $m^3$ | sewage sludge |
| Kowalczyk et al. | 2011 | continuous | 22 L / 390 L | cow manure |
| Gamble | 2014 | continuous | 0.1 L / 1 L / 10 L | horse manure |

All research into the transferability of AD trials to large-scale operations was carried out for continuous systems, except for Massé et al. [2004], who compared semi-industrial installations for pig manure. Unfortunately, this leaves out most bio-waste-to-biogas plants, since they operate mainly with solid-state (batch) reactors [Kern and Raussen, 2014, p 19].

In general, the authors cited in Table 2.1 found good correlations between laboratory and large- or industrial-scale trials. However, they point out that transferability increases with identical process conditions. Brunn et al. [2007] specify that in their investigations, minor differences in hydraulic residence time, temperature, or feeding schedule had no significant influences on the results. Instead, the substrate composition needed to reflect the average feedstock of the large-scale operation in order to provide scalable results.

Based on these insights and on specific considerations regarding biochar, the trials in this work are carried out as close to the process parameters in a large-scale biogas plant as possible. This includes the small-scale simulation of the processes as well as the use of the original substrate, both a novelty for the scientific investigation of biochar in anaerobic digestion.

## 2.4 Material Flow Analysis (MFA)

The previous methods focused on specific parts of the bio-waste cascade. In order to assess the cascade as a whole system in Chapter 7, an additional set of methodological approaches is required. Since the cascade is part of the waste management system, it is useful to take a look at this area in order to find appropriate methods. Allesch and Brunner [2014] reviewed 152 assessments of waste management solutions or whole systems. Based on their results, they recommend the following considerations when assessing waste management systems:

- A mass balance approach based on a rigid input-output analysis of the entire system.
- A goal-oriented evaluation of the results of the mass balance, which takes into account the intended waste management objectives.
- A transparent and reproducible presentation of the methodology, data, and results.

These considerations shall also be the basis for the assessment of the biochar-enhanced bio-waste cascade. A material flow analysis will be used to implement the mass balance approach.

According to Brunner and Rechberger [2004, p 3], "*MFA is a systematic assessment of the flows and stocks of materials within a system defined in space and time. It connects the sources, the pathways, and the intermediate and final sinks of a material.*" The following terms can be used to analyze and describe material flows in a reproducible and transparent manner [Brunner and Rechberger, 2004, pp 3–4]:

- **Materials** in MFA can describe everything from a chemical element up to a good with an economic value. A single type of matter, based on the same elements or molecules, can also be called a substrate, as in the case of carbon, or pure water.

- **Processes** can describe the transformation, separation, or transportation of a material.
- **Stocks** are sources or sinks of material within an MFA system. Depending on the flows, they can grow or shrink over time.
- **Flows** describe the amount of material per time that goes from one process or stock to another. Flows entering the system are called imports; flows leaving the system are called exports. A flow, which is also defined by a cross section, e.g., the amount per time and person, is called a flux.
- A **system** in an MFA usually contains stocks, flows, and processes within a defined boundary. However, it can be as small as one process. Therefore, an MFA system does not have the same meaning as a system defined by systems theory (see von Bertalanffy [2001, pp 55–56]. Nonetheless, MFA could be applied to such a system as well.
- An **activity** contains different systems, which together provide a specific service, such as transportation. This allows the comparison of alternative combinations of systems.

The last point, activity, will not be used in the MFA of the cascade. While single processes, like anaerobic digestion or composting, could be described as systems, as in Chapter 3 about the "Essentials of Bio-Waste Recycling and Biochar," there will be no comparison of alternative combinations, but rather a comparison of two scenarios, one with the implementation of biochar and one without, *i.e.*, the baseline scenario. To do this in a concise manner, the different technologies will be described as single processes.

Stocks will not be used for the technical processes, since a bio-waste treatment plant should not accumulate any materials. However, the investigation of the cascade includes the process "soil," which, of course, can act as a sink or source of materials, e.g., carbon, or nutrients. Therefore, the MFA will contain stocks for this one process.

Fluxes are a good way to compare specific material flows based on per capita, or per economic power. However, the MFA of the cascade is solely based on the flow changes of a specified amount of material, for example, of 1 Mg bio-waste. Therefore, the MFA will not contain any fluxes.

In regard to the nature of the cascade, an **MFA has a serious drawback**. Because energy recovery plays a major role there, this aspect should not be left out. While it is possible to analyze this part in addition to the material flows, it would make sense to integrate both flows into a common analysis. This novel approach is described in Section 2.4.2 "Adapted MFA and Assessment," together with the details of the subsequent assessment of the results.

### 2.4.1 Assessment of MFA Results

While MFA is the necessary basis of many systematic assessment methods, it is not enough to describe a system in its entirety. For that, an MFA has to be combined with analyses

regarding energy flows, and ecologic and financial issues, in an interdisciplinary way, as Brunner and Rechberger [2004] emphasize as well. The following methods are shortly reviewed in regard to their suitability for assessing the biochar-bio-waste cascade. While there are many more methods available, the selected ones provide a sufficient overview of different approaches.

Table 2.2 compares all subsequently reviewed methods in regard to their considerations for the areas that mainly determine the viability of the cascade. As can be seen, no approach gives equal weight to energy, ecology, and finance. Therefore, a relatively concise and transparent set of indicators is created, that allows an assessment in which all three areas are considered equally (see Section 2.4.2).

Table 2.2: Qualitative comparison of MFA assessment methods.

| **Assessment Method** | **Abbre-viation** | **Considerations for** | | |
|---|---|---|---|---|
| | | **Energy** | **Ecology** | **Finance** |
| Material Input per Service Unit | MIPS | + | ++ | · |
| Exergy | – | +++ | · | · |
| Life Cycle Assessment | LCA | ++ | +++ | · |
| Sustainable Process Index | SPI | ++ | +++ | · |
| Swiss Ecopoints | SEP | + | +++ | · |
| Cost-Benefit Analysis | CBA | + | + | +++ |

Note: · none, + minor, ++ average, +++ strong.

### Material Input per Service Unit (MIPS)

The MIPS method accounts for abiotic and biotic materials that are used or moved for the provision of a service. This also includes water and air. Energy inputs are accounted for through the amount of fossil energy carriers, which excludes a view of the emitted GHGs. MIPS essentially assesses the resource productivity of a product or service. This concept was developed by Schmidt-Bleek [1998] and provides an easy, understandable indicator for the de-materialization of the economy, *i.e.*, the reduction of the material input that must be provided for the services required by the society.

One reason for the development of this indicator was that current economic prices hardly cover all environmental costs. Therefore, MIPS is a good addition to any economic assessment. However, since environmental costs are expressed in the material amount only, minor material flows with ecotoxicological effects are difficult to address with this method.

In regard to the investigated cascade, MIPS has its limitations, because the service unit is difficult to define. Does it include the provision of energy and fertilizer, or only the disposal of a waste, or all of these together? In addition, should the service unit be the recycling of a waste, or is that only one step in the provision of, for example, food or a green urban environment? However, this last point is a general problem with all

assessment methods that include life cycle thinking.

### Exergy

According to Brunner and Rechberger [2004, pp 142–143], "Exergy is a measure of the maximum amount of work that can theoretically be obtained by bringing a resource (energy or material) into equilibrium with its surroundings through a reversible process (*i.e.*, a process working without losses such as friction, waste heat, etc.)." Other terms that have been synonymously used for exergy are *available work*, *availability*, and *essergy* (essence of energy).

While exergy was first used to improve energetic systems, it can also be applied to material balances or to combined balances of material and energy. Yet, the calculated exergy losses do not provide information about the non-energetic relevance of substances, e.g., their toxicity. For example, the emission of 1 kg PCDD/F (dioxins and furans) corresponds to an exergy value of 13 MJ, which equals the release of 0.5 $m^3$ of warm water [Brunner and Rechberger, 2004, pp 144–145].

This method could be a good addition to the assessment of single processes within the cascade. However, an energy-only method does not seem appropriate for a system with a combination of material and energy outputs that emphasizes ecologic aspects as well.

### Life Cycle Assessment (LCA)

An LCA assesses the ecological impacts of a product or service during its life cycle. The procedures of an LCA are part of the ISO 14000 environmental management standards [ISO, 2016]. These principles and their framework are regulated in ISO 14040, and the requirements and guidelines are laid out in ISO 14044. According to them, an LCA is carried out in four distinct phases:

1. Goal and Scope: includes the specification of the context and the intended audience of the study, as well as the identification of:
   - the functional unit, which quantifies the service delivered by the product, e.g., 1 Mg compost, 1 Mg of disposed bio-waste, 1 Mg delivered nitrogen, or 1 kWh of generated power;
   - the system boundaries, as in the case of an MFA;
   - any assumptions and limitations; and
   - the allocation methods for partitioning environmental loads if other products or services are involved in the same processes, e.g., if sewage sludge is to be co-composted in a bio-waste treatment facility.

2. Life Cycle Inventory: similar to an MFA, except that in an LCA, not only specific flows, but all flows in any relation to the functional unit are analyzed.

3. Life Cycle Impact Assessment: inventory parameters are assigned to selected impact categories; the latter can be ranked and are sometimes weighed to sum up their total environmental impact.

4. Interpretation: the identification, quantification, and evaluation of the results from the inventory and the impact assessment, which includes checks for completeness, sensitivity, and consistency and ends with conclusions and recommendations.

LCA is a well standardized assessment method and covers the whole life cycle of products and services. However, it is also a laborious method that seems to have many pitfalls. In the investigation of several LCAs, various critical aspects were addressed:

- NCASI [2004] made a review of LCA studies about carbon cycles in wood and paper products and found that many authors make simplified assumptions, e.g., for the methane emissions from organics in landfills, or ignore important parts of the life cycle, such as the carbon sequestration of long lasting wood products.
- Schmitz [2014] reviewed, in her Master's thesis, LCA studies on industrialized algae production, which revealed bad documentation of methodical decisions. In addition, the quality of the data that was used was often poor.
- Schott et al. [2016] reviewed 19 LCAs with a total of 103 scenarios on food waste management that compared landfilling, incineration, anaerobic digestion, and composting in regard to GHG emissions. They conclude that the differences among the studies, in terms of greenhouse gas accounting, stem primarily from the choices made by the researchers in relation to energy- and or bio-system substitution, e.g., substituting fossil fuels, peat moss, or mineral fertilizer, rather than from differences in the data.

In general, LCAs are often based on a large quantity of data. This makes it hard to review them and to assess their quality. However, this is not the biggest problem. The outcome of an assessment depends heavily on its objectives, which can easily be met by selecting appropriate system boundaries and excluding or including specific processes (see also Chapter 4). Unfortunately, it also takes a long time to review the underlying arguments that lead to these seemingly objective decisions.

While LCA is a rather holistic method, it seems not to provide a concise assessment that can easily be verified. Taking into account, as well, the disproportionate effort needed to perform this method, it does not seem to be well suited to the assessment of the proposed cascade.

### Sustainable Process Index (SPI) and Footprints

The sustainable process index was developed by Narodoslawsky and Krotscheck [Brunner and Rechberger, 2004, p 137]. It compares the necessary area for a specific human activity, based on material and energy extraction and deposition, with the statistical area available for every human on earth. The SPI, like an LCA, takes the whole life cycle of a good or service into consideration. The resulting footprint is defined by seven categories. They are: direct land consumption, consumption of non-renewable, renewable, and fossil resources,

and emissions to air, water, and soil. If the footprint is larger than one, then the process is not sustainable.

Because this index is very comprehensible, several tools, similar to the SPI, were developed to assess personal footprints. In contrast to the SPI, they do not include the ocean surface for their footprint. The following list provides some examples of these tools:

- Global Footprint Network: `http://www.footprintnetwork.org`
- Swiss WWF: `http://www.wwf.ch/de/aktiv/besser_leben/footprint/`
- Austrian Federal Ministry of Agriculture, Forestry, Environment and Water Management: `http://www.mein-fussabdruck.at/`
- German "Bread for the World": `http://www.fussabdruck.de/`

In addition to the tools above, more specific methods were developed, which focus only on the water or carbon dioxide footprint:

- Water Footprint Network: `http://waterfootprint.org`
- German ecogood company: `http://www.ecogood.de/l/co2-bilanz/`
- Austrian Broadcasting Corporation: `http://www4.ichundco2.at/`

The SPI and related footprints are strongly based on sustainability and equal rights for all humans. While these are generally very important aspects, they play only a minor role in the investigation of the cascade. It is not investigated whether people waste too much food or whether it would be more sustainable to direct all organic carbon into agriculture, rather than to convert some of it to energy. Therefore, in regard to the scope and aim of this work, this method is also not well suited to assess the proposed cascade.

### Swiss Ecopoints (SEP)

The Swiss Ecopoints method is based on the concept of critical pollution loads, which was further developed by members of the service sector, the industry, the administration, and the academia in Switzerland [Brunner and Rechberger, 2004, p 141]. Critical pollution loads are a very good concept to assess specific technologies or processes in regard to a planned location. For example, an industrial brownfield site could possibly bear more pollution without decreasing its bio-capacity, *i.e.*, the ability of ecosystems to produce useful biological materials [Global Footprint Network, 2016], than a water protection area. The SEP assessment is the only method in this row that takes local and regional differences into consideration.

The SEP score for a specific environmental stressor is calculated with the following equation.

$$\mathrm{SEP_i} = \mathrm{F_i} \cdot \frac{1}{\mathrm{F_{crit}}} \cdot \frac{\mathrm{F_{Sys}}}{\mathrm{F_{crit}}} \cdot 10^{12} \tag{2.1}$$

where

$F_i$ = the specific stressor
$F_{crit}$ = the maximum flow of the stressor for the region
$F_{Sys}$ = the actual flow of the stressor in the region

Since the cascade is not investigated for a specific location, but rather for a general implementation in Germany and the EU, this valuable method would not be practical.

#### Cost-Benefit Analysis (CBA)

In contrast to the previous methods, the cost-benefit analysis has a strong focus on finances. According to Brunner and Rechberger [2004, p 145], extensive literature on the foundations of CBA emerged in the late 1950s, while more than 150 years ago, J. Dupuit published his work about constructing bridges in this regard.

All costs and benefits for alternative projects or scenarios are compiled into a monetary unit (e.g., €, £, ¥). The results can be compared very easily. In addition, money is a unit of measurement that is very well known to decision makers.

However, not all costs and benefits can be easily expressed in money. For example, the beauty of a landscape. Therefore, as in every assessment method, certain aspects of the system have to be evaluated in a partly subjective manner. To make this process as sound as possible, additional methods, like hedonic pricing and the modified cost-effectiveness analysis, have been developed.

CBA is very single-sided towards financial issues. It would therefore not be an appropriate method for the assessment of the whole cascade. However, financial costs and benefits will be implemented in the assessment, as discussed in the following section.

### 2.4.2 Adapted MFA and Assessment

The existing MFA is extended into a material and energy flow analysis (MEFA) to correspond better to the nature of the biochar-bio-waste cascade. In addition, a simple indicator system is developed to provide the basis for a concise and transparent assessment.

#### Extended Mass Balance Approach

Since the cascade is intended to recover material and energy, it would be helpful to include both aspects in one analysis. Such a combined consideration of different flows is not entirely new. For example, Fischer et al. [2009] included in their investigation of three biogas plants not only material, but also energy flows. However, both flows could not be visualized together in one graphic. This is because energy and material flows cannot have the same unit and therefore cannot be mixed in the common Sankey-style flow diagrams, which are also used in MFA. The line width of a material flow would simply have no relation to the line width of an energy flow. The usual clarity of an MFA flow diagram would be lost.

As a consequence, the author developed a new graphical syntax which allows the integration of energy flows into MFA diagrams to overcome this problem. In this syntax, implemented with LaTeX and the TeX packages Ti*k*Z and PGF [Tantau, 2015], energy

flows are depicted as curved black lines with a constant, rather small, width. They can be placed over gray material flows without obstructing their clarity. The energy amount is proportional to the amplitude of the curves and the energy type is represented by different segment lengths.

Although different types of energy can be measured with the same unit, e.g., in joules or kilowatt hours, it is important to distinguish between, for example, chemical (ch), thermal (th), and electric (el) energy. Electricity is most valuable, because all electronic technology requires it and it can be converted very efficiently into other forms, like mechanical or thermal energy. In contrast, the conversion of heat into electricity is accompanied by far higher losses. Chemical energy, e.g., the gross calorific value (higher heating value) of a fuel, can be placed between electricity and thermal energy. Therefore, it is depicted with a mid-sized segment length, while electricity is more pronounced with half of that length, and thermal energy is depicted as less dense with two times that length.

The energy flows can be independent of material flows, e.g., in the case of electricity. However, this can also happen with fuels, when the respective material flow is of no relevance to the analysis. Furthermore, material flows can also be without a coupled energy, when they have no heating value and their temperature is near ambient values.

The graphical syntax for a combined material and energy flow can only depict one form of energy at a time. In most cases, this will be enough for a clear illustration of a system. However, sometimes two energy forms could be coupled to a material flow, e.g., heated biomass (ch+th) in a biogas plant. Although it would be possible to extend the syntax so that one energy form could be laid above the other — they have different segment lengths — it is recommended that the regarded processes and flows be arranged in such a manner that one material flow is coupled to only one energy flow.

Figure 2.3 on the following page provides a simple example of the syntax by depicting a system with only one process, the combustion of wood, as well as the respective material and energy flows. Because the example depicts only a very small system, the legend above seems comparatively large. The comprehensive legend declares the different flow types and provides the total amounts of imported and exported material and energy in the analyzed system.

As in an MFA [Laner et al., 2014], it would be possible to account for uncertainty in a MEFA as well. For example, it is likely that one does not know exactly how much usable heat is yielded from the combustion process in Figure 2.3, or if the arising ash is exactly 1 % of the initial wood mass. In such cases, the respective numbers could be extended with a ± sign followed by the known deviation. For systems with more than one process, these deviations can propagate to subsequent flows. According to Brunner and Rechberger [2004, pp 69–80], their deviations can then be approximated using Gauss's law of error propagation, if the flow values are based on measurements with normal distribution, and if their deviations are small. If these two requirements are not given, then a Monte Carlo simulation would be the appropriate alternative.

However, the MEFA for this investigation will not quantify the existing uncertainties. While the chosen values only approximate the reality of existing bio-waste cascades or of the proposed cascade, it is hardly possible to provide statistically based deviations

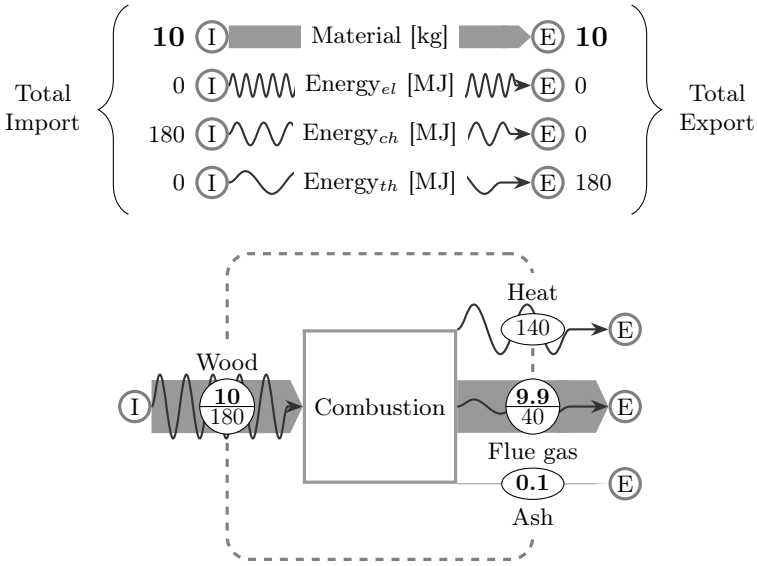


Figure 2.3: Example of an extended MFA based on the developed graphical syntax.

for all numbers. The novelty of the proposed and not yet realized cascade, in particular, makes this impossible. Therefore, any integration of deviations would provide only a false sense of certainty. As an alternative, the specific data sources and assumptions for important flows will be provided for each MEFA in a concise table. While this approach is not comparable with a comprehensive data characterization framework, as proposed by Schwab et al. [2016], it may provide a more solid evaluation of uncertainty than is possible with assumptions about the underlying probability distributions [Laner et al., 2015].

### Indicator-Based Assessment

As outlined in Section 2.4 (MFA), the assessment of the cascade will be goal-oriented, taking into account the intended waste management objectives. For the existing cascade, these are the recovery of energy from bio-waste and the material recycling to compost. The goal of the biochar enhancement is to improve both. Another goal of this work is to investigate how viable such an enhancement would be in the current legal and economic framework. For a concise and transparent assessment of all these issues, a set of indicators should be helpful.

The use of indicators is a common method for concisely pointing out specific areas of interest. Examples include return on investment (finances), acidification potential (ecology), and the literacy rate (social area). Sets of indicators are also applied to the measurement of such complex issues as sustainable development [Mitchell, 1996], which covers a wide range of ecological, social, and financial aspects. The complexity of the proposed cascade is, in comparison, quite limited. Therefore, it is possible to select appropriate indicators that reflect the goals of this work in a rather straightforward

process. The following points provide the chosen indicators and the reasons why they were chosen:

- The recovery of **energy** can easily be represented in an energy to bio-waste ratio. An improvement would mean more energy per amount of bio-waste. Since the recovered energy comes in two forms, the respective indicators are:

  $\Longrightarrow$ $\mathrm{kWh_{el}\,Mg^{-1}_{bio\text{-}waste}}$, *i.e.*, kilowatt hours electricity per ton of bio-waste

  $\Longrightarrow$ $\mathrm{kWh_{th}\,Mg^{-1}_{bio\text{-}waste}}$, *i.e.*, kilowatt hours usable heat per ton of bio-waste

- The improvement of the **ecology** of composting can be described in a process- or in a product-oriented way. Since the compost quality depends strongly on the process [Dunst, 2015], it is appropriate to concentrate on the composting product, indirectly assessing the process. Setting avoidable contamination and impurities aside, the quality of compost is largely based on the amount of carbon compounds and nutrients. Accounting for these ingredients would result in a weight-based quality indicator. However, carbon compounds and nutrients come in many forms. Therefore, a simplification is required that still reflects the impacts of these material flows. For carbon compounds, it would make sense to account for the elemental carbon (C) that is involved in soil functions. For the array of macro- and micro-nutrients, plant-available nitrogen (N) would be a good indicator, since it is, like carbon, rather volatile in regard to thermal and biological processes and can easily be lost (unwanted emissions). Therefore, the more C and N is contained in the final compost, the more ecological the process should be, provided that other quality criteria like hygienization are complied with as well. The chosen indicators are, accordingly:

  $\Longrightarrow$ $\mathrm{kg_C\,Mg^{-1}_{bio\text{-}waste}}$, *i.e.*, kilogram functional carbon per ton of bio-waste

  $\Longrightarrow$ $\mathrm{kg_N\,Mg^{-1}_{bio\text{-}waste}}$, *i.e.*, kilogram plant-available nitrogen per ton of bio-waste

- The **financial viability** of any improvements depends on the legal and economic framework. Both frameworks can, to a large degree, be described with financial measurements alone, since legislation strongly influences the financial costs and benefits of waste management, be it with restrictions or incentives. However, this also implies that a financial indicator would be volatile not only in regard to general economic changes, like shifts in labor cost, but also in regard to changing regulations, like new feed-in tariffs for electricity from bio-waste. Nonetheless, an indicator that provides the costs in euros per amount of bio-waste is still useful to assess the current viability of the cascade and to point out a possible need for change in the legal and economic framework. The chosen indicator is:

  $\Longrightarrow$ $\mathrm{€\,Mg^{-1}_{bio\text{-}waste}}$, *i.e.*, financial costs in euros per ton of bio-waste

It would be possible to choose more and different indicators. The assessment of ecology, especially, allows for several approaches. For example, a more emission-oriented set of indicators would have included the accounting of GHGs. This would seem logical, since

biochar is often regarded as a climate mitigation instrument. However, the investigation of the cascade is focused on improving the energy recovery and the production of compost. Therefore, the GHG emissions are only regarded indirectly, as avoided losses in the recycling process.

# 3 Essentials of Bio-Waste Recycling and Biochar

Each step of the proposed cascade is characterized by different concepts and technologies. These have to be understood to analyze the resulting material and energy flows. The common denominator of all cascade steps is bio-waste.

## 3.1 Bio-Waste – A Heterogeneous Resource

The Waste Framework Directive (WFD) defines bio-waste as follows:

> *Biodegradable garden and park waste, food and kitchen waste from households, restaurants, caterers and retail premises, and comparable waste from food processing plants.* [2008/98/EC]

### Material Composition

According to the definition of the WFD, bio-waste is a very heterogeneous material. However, within this work, bio-waste refers only to the content of bio-waste bins, consisting mostly of food and kitchen waste, while garden and park waste is labeled as green waste. The latter is congruent with Code 20 02 01 of the European Waste Catalogue (EWC) [2014/955/EU]. In contrast, waste collected in bio-waste bins is not coded by the EWC and is therefore summarized under Code 20 03 01 for mixed municipal waste. However, for statistical purposes, the code is extended in Germany to 20 03 01 04 to account for bio-waste from bio-waste bins as well [Destatis, 2015]. Despite this differentiation, green waste and bio-waste are still very heterogeneous, as the physical properties in Figure 3.1 reflect.

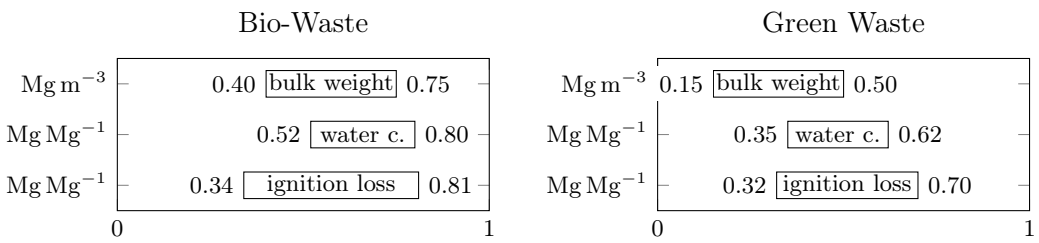


Figure 3.1: Range of bulk weight, water content, and ignition loss (ODM) for bio-waste and green waste (according to Kranert et al. [2010, p 561]).

In addition, the nutrient contents vary greatly. Figure 3.2 provides the range of five macro-nutrients for bio- and green waste. Nitrogen (N) and magnesium (Mg) are given in total, while phosphorus (P), potassium (K), and calcium (Ca) are given in equivalents.

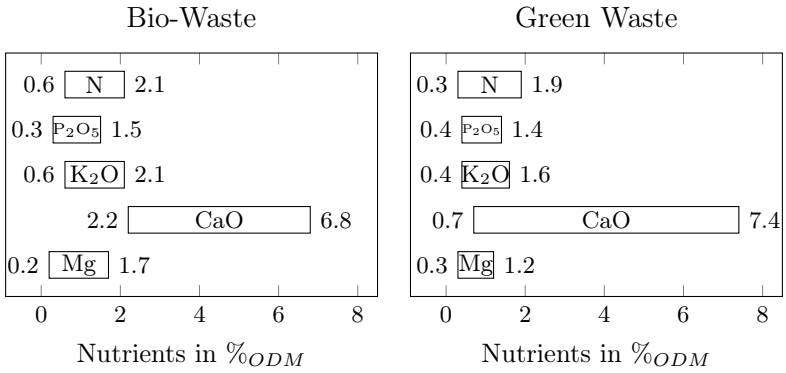


Figure 3.2: Range of nutrient contents for bio-waste and green waste (according to Kranert et al. [2010, p 561]) in percent organic dry matter ($\%_{\mathrm{ODM}}$).

Similar to the physical properties and nutrient contents, the variation of heavy metal loads is high as well. Figure 3.3 shows them in relation to the thresholds for the land application of treated organic waste. In general, green waste shows less contamination. One explanation would be the lower likelihood of coming in contact with residual household waste. A closer look at the factors that influence the quality of green and bio-waste is taken in Chapter 5, as well as in a recent publication by Kranert et al. [2016].

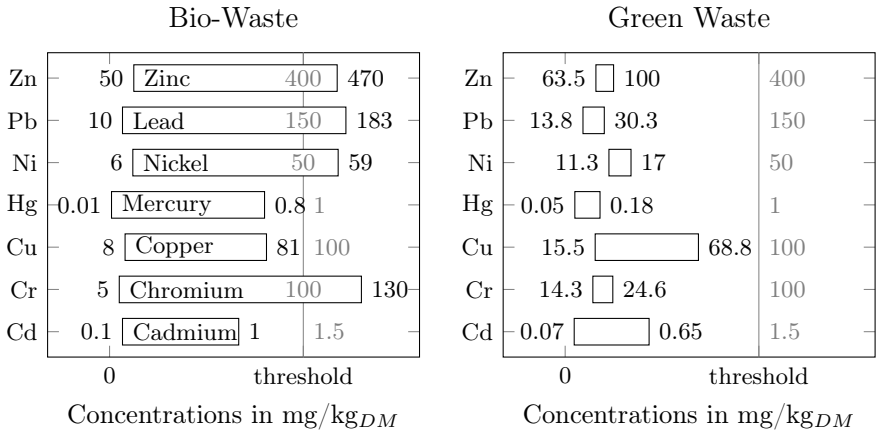


Figure 3.3: Range of heavy metal contents for bio-waste and green waste (according to Kranert et al. [2010, pp 561–562]) normalized to the thresholds set by the German Bio-Waste Ordinance [BioAbfV].

### Energy content

The recovery of energy plays a major role in the investigated cascade. Therefore, it is crucial to know the energy content of bio-waste. There are direct and indirect methods to determine this parameter. Since the analyses in this work depend largely on the indirect methods, they are briefly described and compared.

The energy content of a material is based on its composition and represented by the calorific value, *i.e.*, the energy released when burnt in air. This parameter is given either in net or in gross value. The net calorific value, the lower heating value (LHV), dismisses the latent heat in the water vapor of the exhaust gas because, in most conversion processes, it cannot be used. The gross calorific value (GCV), the higher heating value (HHV), accounts for the latent heat in water vapor and therefore for the total energy contained in a material.

The HHV can be directly measured with a bomb calorimeter or indirectly determined from other parameters. The indirect way is based either on a proximate analysis that provides, among other factors, volatile matter (VM), fixed carbon (FC), and ash (Ash) or on an ultimate analysis that provides the elemental composition of a material.

An ultimate analysis generally includes a sequence of high-temperature sample digestion, separation of gaseous components, and detection. For the estimation of the HHV based on the results, several formulae are available. The first formula was developed by Pierre Louis Dulong (1785–1838) for the estimation of the LHV, which was later modified by Boie [1957] based on further empirical data. The LHV can be calculated into the HHV by adding the latent heat from the vaporized water, including the hydrogen that reacted to water. A more current formula by Channiwala and Parikh [2002] was derived from 225 data points and validated for an additional 50 data points:

$$\mathrm{HHV} = 0.3491 \cdot \mathrm{C} + 1.1783 \cdot \mathrm{H} - 0.1034 \cdot \mathrm{O} - 0.0151 \cdot \mathrm{N} + 0.1005 \cdot \mathrm{S} - 0.0211 \cdot \mathrm{A} \quad (3.1)$$

where

HHV = the higher heating value in $\mathrm{MJ\,kg_{DM}^{-1}}$
C = the carbon content in $\%_{\mathrm{DM}}$, for a range from 0 to 92.25
H = the hydrogen content in $\%_{\mathrm{DM}}$, for a range from 0.43 to 25.15
O = the oxygen content in $\%_{\mathrm{DM}}$, for a range from 0 to 50.00
N = the nitrogen content in $\%_{\mathrm{DM}}$, for a range from 0 to 5.60
S = the sulphur content in $\%_{\mathrm{DM}}$, for a range from 0 to 94.08
A = the ash content in $\%_{\mathrm{DM}}$, for a range from 0 to 71.40

A proximate analysis requires merely the heating of the material to 950 °C for 7 min under exclusion of air. The resulting mass loss represents the volatile matter content, which reflects the fuel ignition and incineration behavior. The ash content can simply be obtained by incineration of the sample, and the fixed carbon content can be calculated from the initial mass minus ash and volatile matter. For the estimation of the HHV from proximate analyses, several formulae were developed. One example is the formula by

Parikh et al. [2005], which covers the entire spectrum of solid carbonaceous materials based on 450 data points and validated for an additional 100 data points:

$$\mathrm{HHV} = 0.3536 \cdot \mathrm{FC} + 0.1559 \cdot \mathrm{VM} - 0.0078 \cdot \mathrm{A} \tag{3.2}$$

where

HHV = the higher heating value in $\mathrm{MJ\,kg_{DM}^{-1}}$
FC = the fixed carbon in $\%_{\mathrm{DM}}$, for a range from 1 to 91.5
VM = volatile matter in $\%_{\mathrm{DM}}$, for a range from 0.92 to 90.6
A = ash content in $\%_{\mathrm{DM}}$, for a range from 0.12 to 77.7

Although a proximate analysis requires only three parameters, there exist even more simplified formulae that work with only one. Ramke [2008, p 17] reports on a formula that approximates the HHV from the ignition loss (ODM) alone. The ODM is obtained by heating a dry matter sample (dried at 105 °C) up to 220 °C for 30 min and then up to 550 °C for 120 min, oxidizing all organic material, to be finally cooled down in a desiccator and weighed afterwards. The difference between this measurement (ash weight) and the dry matter weight, divided by the dry matter weight, provides the ODM. The ODM-based formula was developed for a general mix of waste material.

$$\mathrm{HHV} = 0.523 \cdot \mathrm{ODM}^{0.77} \tag{3.3}$$

where

HHV = the higher heating value in $\mathrm{MJ\,kg_{DM}^{-1}}$
ODM = the organic dry matter (ignition loss) in $\%_{\mathrm{DM}}$

Table 3.1 provides data for three bio-waste samples from the Netherlands [ECN, 2016], which underwent not only an ultimate but also a proximate analysis. From the results, the HHV is calculated according to the presented three formulae.

Table 3.1: Calculation of the higher heating value with three different methods.

| **Method** | **Ultimate Analysis** | | | | | **Proximate Analysis** | | | **ODM** | **Calculation** | | |
|---|---|---|---|---|---|---|---|---|---|---|---|---|
| **Parameter** | **C** | **H** | **O** | **N** | **S** | **A** | **FC** | **VM** | **ODM** | **HHV** | **HHV** | **HHV** |
| Ultimate | 0.3491 | 1.1783 | -0.1034 | -0.0151 | 0.1005 | -0.0211 | | | | ↩ | | |
| Proximate | | | | | | -0.0078 | 0.3536 | 0.1559 | | | ↩ | |
| ODM | | | | | | | | | $0.523()^{0.77}$ | | | ↩ |
| # 3198 | 33.96 | 4.04 | 26.27 | 1.73 | 1.54 | 36.96 | 10.68 | 52.36 | 63.04 | 13.25 | 11.65 | 12.71 |
| # 1716 | 25.84 | 3.32 | 20.56 | 1.29 | – | 48.80 | 11.00 | 40.20 | 51.20 | 9.76 | 9.78 | 10.83 |
| # 3199 | 34.44 | 4.16 | 26.07 | 1.69 | 0.80 | 36.09 | 10.52 | 53.39 | 63.91 | 13.52 | 11.76 | 12.85 |

Notes: # Phyllis2 ID [ECN, 2016]; all bio-waste values in $\%_{\mathrm{DM}}$; C H O N S = chemical elements; A = ash; FC = fixed carbon; VM = volatile matter; ODM = organic dry matter (ignition loss); HHV = higher heating value in $\mathrm{MJ\,kg_{DM}^{-1}}$, calculated with Equation 3.1, 3.2, and 3.3.

It can be seen that the results of the different calculation methods vary less than 15 % between each other. This makes all of them equally reliable, even though this is based on only three samples. Interestingly, sample # 1716, for which a directly measured HHV is available (10.84 MJ $kg_{DM}^{-1}$), is best estimated with the simple ODM formula (10.83 MJ $kg_{DM}^{-1}$). Assuming that bio-waste would have an average water content of 65 % and an average ODM of 55 % (according to Figure 3.1 on page 25), this formula would suggest a dry matter-based HHV of around 11.5 MJ $kg_{DM}^{-1}$ and a fresh matter HHV of around 4 MJ $kg_{FM}^{-1}$. However, average values may lead to a misrepresentation of reality, as they can strongly be influenced by outliers.

Since the ODM formula requires only one parameter, it is applicable for a wider range of bio-waste samples. The Phyllis2 database [ECN, 2016] provides altogether nine samples with ODM values, including the three samples from Table 3.1. The calculated HHVs are presented in Table 3.2, together with their average and median values.

The median HHV of the nine samples is with 5.4 MJ $kg_{FM}^{-1}$ around 35 % higher than the HHV based on the average values in Figure 3.1. While the nine samples from the Netherlands represent only a tiny fraction of bio-waste, their calculated energy content fits much better to the investigated energy flows of existing bio-waste-to-biogas plants, as presented in Section 3.3. Therefore, this median value will be applied in the material and energy flow analysis MEFA in Section 7.4.

Unfortunately, the Phyllis2 database provides far less data for green waste than for bio-waste. Taking the average values from Figure 3.1 into consideration, the HHV would be around 5.6 MJ $kg_{FM}^{-1}$. However, it can be expected that, as for bio-waste, this average value does not represent reality accurately. Therefore, the 35 % energy increase for bio-waste is applied to green waste as well. This leads to a green waste energy content of around 7.5 MJ $kg_{FM}^{-1}$, which corresponds better with the few analyses about biochar from green waste (see Section 3.4). Therefore, this energy content will be used for the MEFA in Section 7.4 as well.

Table 3.2: Higher heating values of nine bio-waste samples from the Netherlands, calculated from their ODM content.

| **Parameter** | **Unit** | **Bio-Waste Samples** | | | | | | | | | **Average** | **Median** |
|---|---|---|---|---|---|---|---|---|---|---|---|---|
| ID | # | 3198 | 1716 | 3199 | 1341 | 1342 | 1343 | 1344 | 1765 | 1300 | | |
| Water | $\%_{FM}$ | 57.3 | 9.7 | 16.7 | 53.7 | 60.0 | 62.5 | 65.0 | 59.6 | 54.0 | 48.7 | 57.3 |
| Ash | $\%_{DM}$ | 37.0 | 48.8 | 36.1 | 17.9 | 35.0 | 40.0 | 57.0 | 44.3 | 18.9 | 37.2 | 37.0 |
| ODM | $\%_{DM}$ | 63.0 | 51.2 | 63.9 | 82.1 | 65.0 | 60.0 | 43.0 | 55.7 | 81.1 | 62.8 | 63.0 |
| HHV dry | MJ $kg_{DM}^{-1}$ | 12.7 | 10.8 | 12.8 | 15.6 | 13.0 | 12.2 | 9.5 | 11.6 | 15.4 | 12.6 | 12.7 |
| HHV fresh | MJ $kg_{FM}^{-1}$ | 5.4 | 9.8 | 10.7 | 7.2 | 5.2 | 4.6 | 3.3 | 4.7 | 7.1 | 6.4 | 5.4 |

Notes: # Phyllis2 ID [ECN, 2016]; FM = fresh matter; DM = dry matter; ODM = organic dry matter (ignition loss); HHV = higher heating value, calculated with Equation 3.3.

## 3.2 Compost from Bio-Waste

Merriam-Webster's dictionary [2016] defines compost as follows:

> *A mixture that consists largely of decayed organic matter and is used for fertilizing and conditioning land.*

### Concept and Technology

Despite the short dictionary definition, compost can come in many forms. Different types are defined by the input material, the process conditions, and the intended use.

The compost within the proposed cascade receives as input anaerobically digested bio-waste, green waste, and pyrolyzed green waste. Since all substrates are or originate from bio-waste in the sense of the WFD-definition, the resulting compost falls into the category of bio-waste compost. Other compost can be based on agricultural inputs such as manure and straw or on industrial residues such as sewage sludge from wastewater treatment plants in the food sector. However, most of these homogeneous substrates have to be mixed with other substrates to provide the required conditions for an optimal composting process [Dunst, 2015].

The composting process is, according to Haug [1993], characterized by a biological degradation and stabilization of organic material that is associated with temperatures above 45 °C. These temperatures result from exothermic biological processes, which even allow the successful composting of complete frozen cattle cadavers [Stanford et al., 2007]. For such performance, the involved microorganisms require first a nutritious substrate, which is often described with the ratio of carbon to nitrogen (C:N). For a quick composting process, the ideal C:N ratio lies between 20:1 and 25:1, while below or above the process takes longer [Bidlingmaier, 1980]. To metabolize the substrate, the microorganisms also require enough water, which is ensured by a moisture content between 45 % and 65 % [Kranert et al., 2010, p 196]. A higher content would hamper the third requirement, the constant availability of oxygen [Dunst, 2015, p 26].

Many different composting technologies are available. An overview of certified plant types in Germany is provided with Figure 4.1 in the next chapter. However, all have simply to provide the aforementioned conditions to support the biological functions. If this is ensured, the process will undergo three distinct phases [Dunst, 2015, pp 78–84]. First, a start-up and degradation phase begins with mesophilic bacteria and continues with the increase of thermophilic bacteria, leading to sanitizing temperatures up to 65 °C. When the easily degradable substances are metabolized, mesophilic bacteria begin to break down higher molecular compounds in the conversion phase (50 to 30 °C). During the maturation phase ($< 30$ °C), stable humus is formed by bacteria and fungi.

Based on the intended use, compost can be provided in a fresh or a mature state. Fresh compost is ideal to provide quickly available nutrients, as they are not completely bound into more complex organic compounds yet. Therefore, it is usually applied as an organic fertilizer in agriculture. Compost that has undergone the full maturation phase is better suited as potting substrate or as an ingredient for soil production.

## Material and Energy Flows

An overview of the material and energy flows of an industrial composting plant provides Figure 3.4. The material flows are based on an exemplary mass balance by Kranert et al. [2010, p 228], on an average energy consumption scenario by Bidlingmaier et al. [2012, p 22], and on an average carbon loss of 50 % during the rotting process [Dunst, 2015, p 13], which equates roughly to the loss of the gross energy content.

The required energy to run a composting plant is expressed in the input of diesel fuel and electricity. Naturally, enclosed plants with forced aeration and exhaust air treatment require more energy than open-space composting without additional aeration.

The average energy content of the screenings, which mainly consist of plastic, glass, metal, and stones, is set to zero. This simplification is based on the fact that most of these materials are inert, *i.e.*, without energy content. Another part of the screenings consists of wood, which certainly has an energy value. However, wood can be used as structural material through several composting cycles until it is metabolized as well.

The gaseous emissions, the main output besides compost, contain mainly water vapor and carbon dioxide. The associated thermal energy is produced by the biological activity during the composting process (rotting). The remaining energy content of the compost is mostly associated with carbon compounds, which can be metabolized further in the soil.

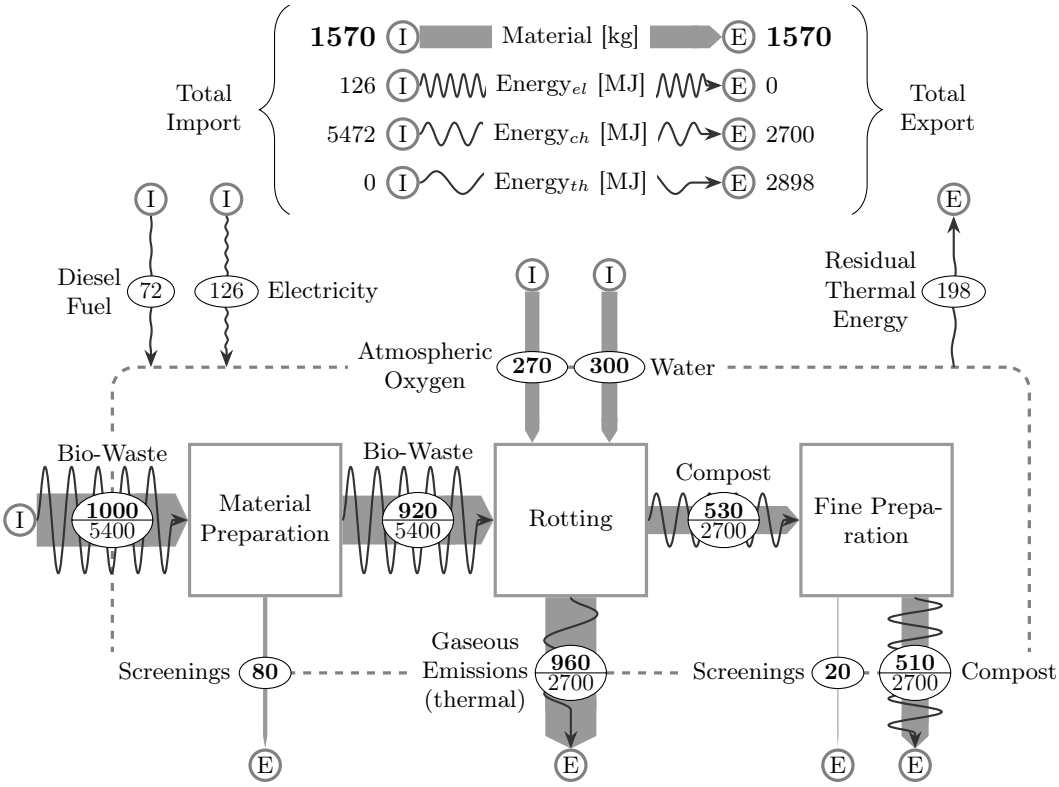


Figure 3.4: Material and energy flows of an industrial-scale composting plant.

## 3.3 Biogas from Bio-Waste

Merriam-Webster's dictionary [2016] defines biogas as follows:

> *A mixture of methane and carbon dioxide produced by the bacterial decomposition of organic wastes and used as a fuel.*

### Concept and Technology

As for composting, also the process of anaerobic digestion (AD) can be realized with different technologies. However, there are three distinctive temperature ranges for which AD units can be optimized. The involved microorganisms are called psychrotrophic ($< 20\,°C$), mesophilic ($20\,°C$ to $45\,°C$), and thermophilic ($45\,°C$ to $60\,°C$) [Kashyap et al., 2003]. According to many years of experience in the biogas sector, most biogas units operate at a constant temperature from $37\,°C$ to $42\,°C$. However, there are also thermophilic units that operate at a temperature from $50\,°C$ to $57\,°C$. With these temperatures, they can provide a sufficient hygienization of biologically contaminated substrates such as sewage sludge.

In contrast to composting, AD is an anaerobic process, *i.e.*, it runs under the exclusion of oxygen. The process consists of four distinct phases, which are characterized by specific bacteria [Kranert et al., 2010, p 233]. The first three phases, hydrolysis, acidogenesis, and acetogenesis, degrade and convert the initial substrate into intermediates. These are then converted to methane ($CH_4$), carbon dioxide ($CO_2$), and water ($H_2O$) during the last phase, called methanogenesis.

All process phases can be run in a single reactor simultaneously. Nonetheless, there are two-stage reactors that allow the optimization of the process conditions for the fast-multiplying bacteria that degrade and convert the substrate on the one side and for the slow-growing and more sensible methanogens on the other side. However, most bio-waste-to-biogas plants in Germany are based on solid-state digestion in single batch reactors [Kern and Raussen, 2014, p 19]. These allow the biogas production from substrates with high solid content, such as bio-waste. Alternatively, such substrates can be pre-processed before they are digested in a continuously stirred reactor.

### Material and Energy Flows

The material and energy flows of an exemplary mesophilic biogas plant for bio-waste according to Kranert et al. [2010, pp 254–256] are illustrated by Figure 3.5 on the next page. The bio-waste input is the same as for the compost plant in Section 3.2. All bio-waste-to-biogas plants in Germany have to treat their digestate with post-composting. However, this step is not included in the figure to focus on the energy recovery via anaerobic digestion (AD) and on the combined heat and power (CHP) unit.

Methane emissions are excluded from the illustration as well. Although they should not be underestimated, it must be noted that they result mostly from the handling of the digestate during storage and post-composting and that they are avoidable to a large extent [Daniel-Gromke et al., 2015; Liebetrau et al., 2013]. A quick forced aeration of

the digestate can help immediately to reduce these emissions. In addition, a longer retention time within the biogas reactor would reduce the methane emissions as well. As an alternative, digestate could also be stored in airtight storage and the collected methane could be used together with the biogas from the main digester. In summary, the exclusion of gaseous emissions from the AD-unit is based on an optimized operation.

The CHP unit converts the produced biogas into usable heat and electricity with an efficiency of around 55 % and 35 %. The AD unit requires around 20 % of the electricity and around 15 % of the heat produced from the biogas. Although the material preparation requires energy as well, the small flows were omitted for reasons of clarity. The same applies to the chemical energy content of the press water. Any minor thermal energies coupled to material flows are included in the residual heat flows.

Considering the whole system, around 35 % of the chemical energy content of bio-waste is converted to usable heat and electricity. Around 15 % is emitted as residual heat or together with the exhaust gas from the CHP unit. The rest, around 50 % remains as chemical energy in the digestate. On the other side, the digestate still holds around 65 % of the mass of the bio-waste input. As a result, the substrate for the subsequent composting has a lower energy content than the original bio-waste.

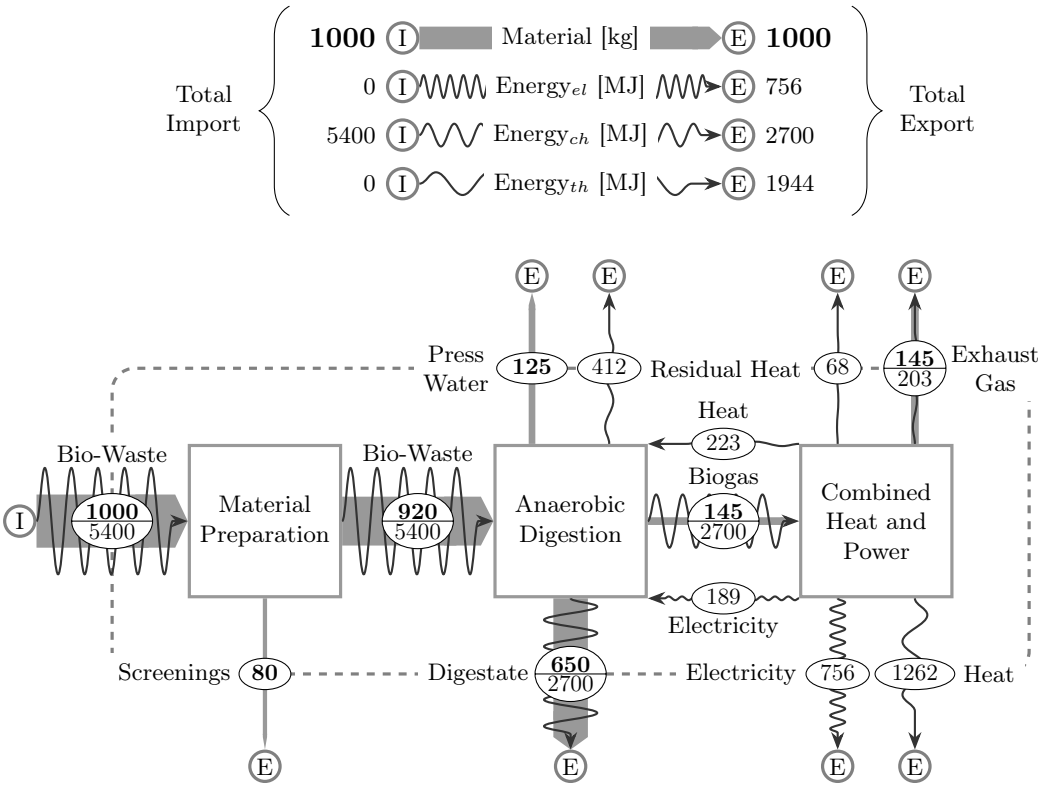


Figure 3.5: Material and energy flows of a biogas plant for bio-waste (based on data by Kranert et al. [2010, pp 254–256]).

## 3.4 Biochar from Green Waste

Merriam-Webster's dictionary [2016] defines biochar as follows:

> *A form of charcoal that is produced by exposing organic waste matter (such as wood chips, crop residue, or manure) to heat in a low-oxygen environment and that is used especially as a soil amendment.*

### Concept and Technology

Charcoal making is a 5,000-year-old technology [Harris, 1999] that fueled many technological advancements and our civilization itself [Meyer, 2009]. However, the creation of charcoal as soil amendment also has a long history. The Pre-Columbian indigenous people of the Amazon basin created with this technology large quantities of fertile patches of soil, *„Terra Preta de Índio“*, amidst very poor ground. Even after their civilization disappeared, the soil remained fertile and is even used today [Marris, 2006]. The high amounts of charcoal particles in the soil led finally to the current interest in the effects of biochar. Recent meta-analyses of crop productivity through biochar by Jeffery et al. [2011] and Liu et al. [2013] revealed a variety of mostly positive yield changes. In this regard, it is not surprising that the concept of biochar was not implemented only in South America. Several man-made soils containing charred biomass can be found in Europe [Wiedner et al., 2015], as well as in Asia [McGreevy et al., 2016].

Biochar can be described as charred biomass. The charring is called pyrolysis and is an exothermic process in the absence of oxygen that degrades organic matter into solid carbon, oil, and gas. Depending on the process parameters, e.g., input material, maximum temperature, and gas retention time, the ratio between solid, fluid, and gaseous products can vary strongly. Table 3.3 provides an overview of different charring processes, their process parameters, and their product yields.

Table 3.3: Comparison of different technologies for biochar production (based on Tripathi et al. [2016], Mašek et al. [2016, p 21], and Reza et al. [2014]).

| **Parameter** | **Unit** | **Slow pyrolysis** | **Fast pyrolysis** | **Flash pyrolysis** | **Gasification** | **Hydrothermal carbonization** |
|---|---|---|---|---|---|---|
| Temperature | °C | 350–400 | 450–550 | 500–600 | 850 | 350–600 |
| Heating rate | $°C\,s^{-1}$ | 0.1–1.0 | 10–200 | > 200 | 1–1000 | 10–300 |
| Residence time | s | 120–1800 | 1–5 | < 1 | 60–300 | > 15 |
| Pressure | MPa | 0.1 | 0.1 | 0.1 | 0.1 | 5–20 |
| Particle size | mm | 5–50 | < 1 | < 0.5 | 20–40 | — |
| Char yield | $\%_{DM}$ | 25–35 | 10–25 | 13–23 | 5–10 | 60-80 |
| Oil yield | $\%_{DM}$ | 20–50 | 50–70 | 50–60 | 1–3 | n/a |
| Gas yield | $\%_{DM}$ | 20–50 | 10–30 | 10–25 | 85–95 | n/a |

Notes: all values represent 'typical' ranges for each technology; $\%_{DM}$ = yield in mass percent based on dry matter input; n/a = not applicable; — = no data found.

An interesting option for the cascade would be a gasification unit, a wood carburetor. Ready-to-use installations including CHP units for the production of electricity and heat are available in different sizes. Currently, a German company offers three types with a throughput of 60, 180 and 270 $Mg_{DM}$ wood chips, based on an annual operating time of 7.000 h [Spanner Re², 2016]. Interestingly, Höllerl [2016] reports on a similar unit that has operated for three years with chipped residues from landscaping, comparable with green waste. However, for the proposed cascade, the slow pyrolysis of green waste is chosen because of the relatively high biochar yield and the comparatively low technological requirements. In addition, for slow pyrolysis, several ready-to-use solutions are available on the market as well [Boateng et al., 2015].

In literature, the pyrolysis of green waste is not examined to a large extent. Nonetheless, some investigations include or specifically focus on this substrate. Ronsse et al. [2013] compare different process conditions for the slow pyrolysis of pine wood, green waste, wheat straw, and spray-dried algae. Unfortunately, the authors provide neither a proximate nor an ultimate analysis for these substrates and focus only on the resulting biochar. In addition, the results are hard to transfer to large-scale units because all substrates are pelletized prior to their laboratory trials to provide comparable process conditions.

For the experiments by Kaudal et al. [2015], analyses of their green waste are provided. Unfortunately, their goal is a biochar for potting substrates, made from a mixture of green waste and sewage sludge. Therefore, the produced biochar cannot be compared with the green waste.

Kabir et al. [2015] focus entirely on the modelling and simulation of green waste pyrolysis based on experimental analysis. Therefore, they provide complete analyses for the input and output of the process. Although the experiment is on a laboratory scale as well, the process parameters are not entirely different from those of a large-scale unit. The chipped green waste from the collection site is only dried and not further pre-treated. The rotary furnace remains, after a steady temperature rise of around 1 °C $min^{-1}$, at 500 °C for one hour. The results of the proximate and ultimate analyses of green waste and biochar are given in Table 3.4. The resulting energy contents (HHVs) are based on the equations from Section 3.1.

Table 3.4: Parameters of a green waste and the biochar produced from it (Proximate and ultimate analysis from Kabir et al. [2015], HHVs calculated with Equation (3.1), (3.2), and (3.3)).

| **Method** | **Ultimate (UA)** | | | | | **Proximate (PA)** | | | **100-A** | **UA** | **PA** | **ODM** |
|---|---|---|---|---|---|---|---|---|---|---|---|---|
| **Parameter** | **C** | **H** | **O** | **N** | **S** | **A** | **FC** | **VM** | **ODM** | **HHV** | **HHV** | **HHV** |
| Green Waste | 46.60 | 5.50 | 47.01 | 0.71 | 0.18 | 8.40 | 16.60 | 72.00 | 91.60 | 17.72 | 17.03 | 16.95 |
| Biochar | 36.60 | 1.60 | 60.00 | 0.74 | 0.15 | 54.90 | 32.90 | 12.20 | 45.10 | 7.30 | 13.11 | 9.82 |

Notes: all values are provided in $\%_{DM}$; C H O N S = chemical elements; A = ash; FC = fixed carbon; VM = volatile matter; ODM = ignition loss; HHV = higher heating value in MJ $kg_{DM}^{-1}$; UA = ultimate analysis; PA = proximate analysis.

According to Table 3.4, the biochar has an ash content of around 55 %. Taking into account the ash content of the original green waste (8.4 %), this seems rather high. However, Lopez-Capel et al. [2016, pp 46–47] report on a green waste from Edinburgh, Scotland with a carbon content of 40.9 % that underwent a lab-scale pyrolysis for 20 min at a temperature of 550 °C. The resulting biochar shows a very low TOC content of 17.8 %, which indicates a likewise high ash content. In addition, the aforementioned publication of Ronsse et al. [2013] reports ash contents of green waste biochar that are half that of straw biochar (high ash) and ten times higher than that of wood biochar (low ash). Based on all these findings, the carbon content and thus the energy content of an average green waste biochar is estimated to be 35 % of that of wood biochar (around 30 MJ $kg_{DM}^{-1}$), which results in a biochar HHV of 10.5 MJ $kg_{DM}^{-1}$.

## Material and Energy Flows

Material and energy flows of an average pyrolysis unit for green waste, based on the previous considerations, are visualized in Figure 3.6. A screening is excluded from the figure based on the assumption that green waste is less contaminated than bio-waste. However, at least a shredding is required to provide appropriate particle sizes. The energy costs for the shredding are excluded because they are allocated to the existing composting operation, which requires shredded green waste as well. The generated pyrolysis gas is completely combusted and drives the process. Excess heat from the combustion is used to dry the shredded green waste to establish an efficient pyrolysis.

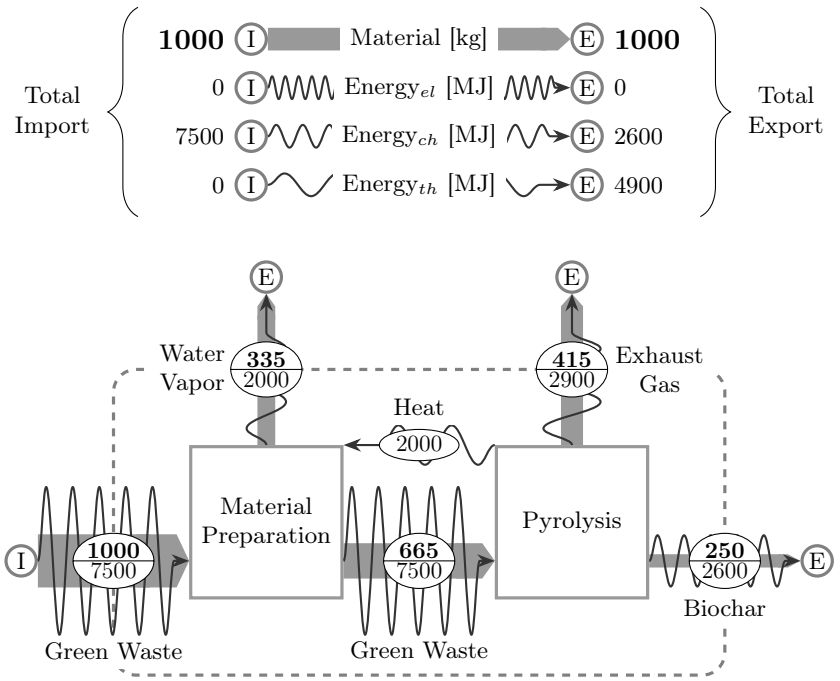


Figure 3.6: Material and energy flows of a pyrolysis unit for green waste.

# 4 The Value of Composting in Germany

### Chapter equals original text:

Daniel Meyer-Kohlstock, Gunnar Hädrich, Werner Bidlingmaier, and Eckhard Kraft. The Value of Composting in Germany – Economy, Ecology, and Legislation. Waste Management, (33/3):536–539, March 2013. doi:10.1016/j.wasman.2012.08.02

### Author Contributions

Daniel Meyer-Kohlstock and Gunnar Hädrich developed and conducted the survey on which the data in this paper are based. Werner Bidlingmaier and Eckhard Kraft provided several points for the legal and economic aspects. Daniel Meyer-Kohlstock analyzed the data and wrote the paper.

## Abstract

Based on a recent survey of German composting plants an evaluation of costs and benefits of composting was attempted. In this regard, several economical, ecological and legal aspects and some interrelations are discussed in this paper. A special emphasis is placed on the fees and compost prices of composting plants. It is also shown how the legal framework provides the economic basis for composting in Germany, how economical and ecological costs and benefits could be assessed, and why it is so difficult to determine the value of composting.

## 4.1 Reasons for Assessing the Value of Composting

The treatment of biodegradable waste is possible with a variety of technologies, such as anaerobic digestion, combustion, or composting. In Germany, the use of source separated biodegradable waste for producing compost is well established. Around 950 composting plants with a combined capacity of approximately 10 Tg (10 million tonnes) exist throughout Germany [BGK, 2011]. Against the background of a total 13 Tg biodegradable waste input for all types of treatment facilities [Destatis, 2010] — composting plants included — it can be said that composting plays a key role in the treatment and utilisation of biodegradable waste in Germany.

Despite that well-established position, there are concerns about a possible diversion of input material to combustion and anaerobic digestion plants, because of incentives for renewable energies. With this possible competition over biomass, the question of the optimal utilisation of biodegradable waste becomes an increasingly important issue.

A sound evaluation of composting in relation to not so well established and still subsidized technologies is important. It is important for taking the necessary steps for directing every kind of biodegradable waste into its respectively best treatment facility, for avoiding bad investments and for allocating capital to the best available options.

## 4.2 The Legal and Economic Framework for Composting in Germany

Prior to the discussion about ways of assessing the value of composting, some basic information about economic and legal aspects, concerning composting in Germany, is given.

### 4.2.1 Legal Aspects

The Waste Act of 1986 [AbfG] implemented the hierarchy of waste prevention, recycling, and disposal, which favours also composting of biodegradable wastes. With the Technical Guidelines for the Disposal of Municipal Solid Waste [TASi], which came into effect in 1993, Germany had to reduce the amount of biodegradable waste going to landfills. Since the EU Landfill Directive, 1999/31/EC came into force, reducing the landfilling of biodegradable waste has become an EU-wide goal, with the intended effect of reducing methane emissions from landfills as well. Although a thermal or mechanical-biological pre-treatment of mixed waste is an option to reach that goal, Germany established a legal framework, which gives preference to source-separated collection and treatment of biodegradable waste. The closing of material cycles, including nutrients, was one main intention and result of this approach.

The Renewable Energy Act [EEG], in act since 2000, is the basis of incentives for renewable energies, which include anaerobic digestion and biomass combustion. The incentives come mainly in form of guaranteed higher purchase prices for electricity provided by these technologies. Since they partly use the same input material, there is a possibility of diverting biomass away from composting plants.

### 4.2.2 Economic Aspects

The financial basis of German composting plants is the fee for taking in the biodegradable waste. Therefore, the price for compost is not a big concern for plant operators, as long as the compost is removed from the plant site. For that, the compost has to have a good quality, so that farmers and gardeners accept it. The Federal German Compost Quality Assurance Organisation (BGK), founded in 1989, takes over the responsibility for that. The fact, that no market saturation occurred, despite the strong increase in compost production during the last two decades, is a sign of the successful work of the BGK.

However, the low market price for compost affects also its appreciation. The question occurs, what is the value of compost? In economic terms, it seems to be very low. The survey revealed the price of compost to be at around 4 € $Mg_{FM}^{-1}$ (4 EUR/tonne fresh matter).

Assuming a degradation rate of 50%, this would relate to 2 € $Mg_{FM}^{-1}$ input material. In comparison, the average input fee, according to the survey, is at around 39 € $Mg_{FM}^{-1}$.

## 4.3 Ways to Assess the Value of Composting

The following discussion about possible ways how to calculate the costs and benefits of composting is by no means complete. It shall provide the basis to comprehend the difficulties associated with determining the value of composting in Germany.

### 4.3.1 Methodology and Data Availability

A sound material and energy balance is the foundation of every assessment, e.g., for a life cycle assessment (LCA), which focuses on ecological aspects, see EASEWASTE [DTU, 2012]. The survey, on which the data, used in this paper, are based, included all composting plants that are subject to the BGK. From these 440 plants with a total capacity of 7.5 Tg, 59 plants with a total capacity of 1.2 Tg provided data. That correlates to a response rate of 16 %, when calculated with total treatment capacity. Figure 4.1 gives a detailed overview about the numbers of answered questionnaires in regard to the numbers of all existing plant types. Several plant types are defined by the BGK, but the most widespread ones, which also provided the most datasets, are No. 6.2 Open Triangular Windrows and No. 6.6 Open Trapezoid Windrows. The figure provides also the information that these two types are operated without forced aeration. Although there are several datasets from plants with forced aeration too, detailed data on energy consumption is scarce for both types. Therefore, it is just possible to analyse the overall energy use of several plants, without knowing there detailed weaknesses and strengths concerning energy and material efficiency. Then there are several plants named "combined", which operate with more than one composting type. For example, they first use an intensive rotting process with forced aeration and later let the compost mature in an open windrow without forced aeration. These plants are hardly to compare with single type plants or just with one another, since they comprise a high variety of type combinations.

Beside the detail level of the data, the outcome of any assessment relies heavily on the chosen system boundaries. For example, to consider just the composting plant with the plant gates as system boundaries would bring some comfort in collecting necessary data, but it blinds out important factors like the transport distances. A plant might look energy-efficient, *i.e.*, a low energy consumption per treated amount of input material, but when very long transport distances are included, the efficiency of the whole treatment chain of this plant could drop drastically in comparison with other plants.

Another example is the usage of the produced output. The compost could be used e.g., as final coverage for landfills, or as substitute for peat in gardening, or as source for humus and nutrients in agriculture. The environmental impact would be different in every case, as recently shown again by Springer [2010]. Therefore, it is hardly possible to evaluate the costs and benefits of composting based only on data from composting plants, a fact which is already considered in LCA approaches. Apart from what should

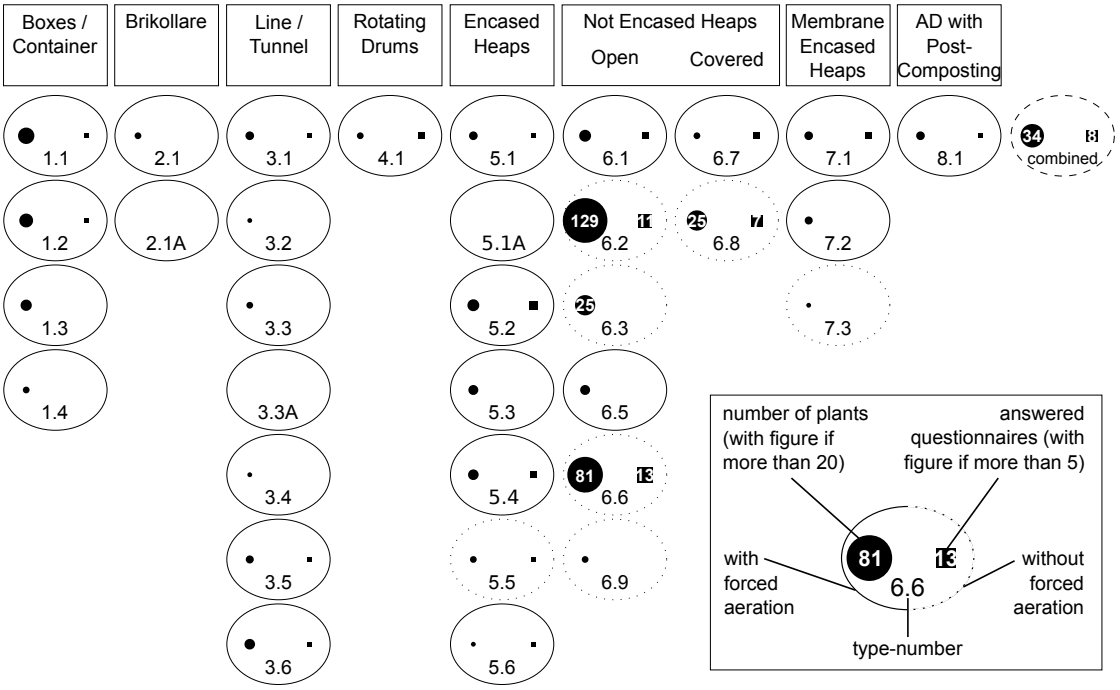


Figure 4.1: Answered questionnaires in regard to existing plant types.

be included into an assessment, the question arises, what can be included? Not only is it difficult to collect detailed data of the plants itself, as already mentioned, it would also involve considerable effort to collect data regarding the material flows to and from several composting plants. It might be impossible at all, since these flows are the consequence of contracts, *i.e.*, sensitive business information, between plant operators, waste producers, and compost buyers. Even when some plant operators provide sensitive data, there might not be enough of it to create sound statements.

In the survey, the authors have collected data regarding the fees and product prices of composting plants. Although a result was achieved, which confirmed the authors' assumptions about the undervaluation of compost; its reliability can be questioned. The calculated average compost price ($4\,€\,\mathrm{Mg}_{\mathrm{FM}}^{-1}$) and input fee ($39\,€\,\mathrm{Mg}_{\mathrm{FM}}^{-1}$) are based on only 14composting plants, which represent 25 % of all plants which provided data during the survey – which were already only 16 % of all composting plants subjected to the BGK. At least 75 % of these 16 % stated that they take money for their compost, 4.5 % stated that they give their compost away free of charge, 20.5 % made no statement.

In Figure 4.2, the basis for the calculated average fee and compost price is illustrated in detail. The relevant data of the 14 composting plants are arranged in three categories, and sorted in ascending order of total income from fees and compost sales. For a better comparability with the fees, the prices for compost were converted to $€\,\mathrm{Mg}_{\mathrm{FM}}^{-1}$ input material. To show the relevance of the data, the plants treatment capacities are also visible. To prevent an identification of the plants, the capacities are rounded to full ten thousands

of Mg. The average fee and compost price were calculated by levelling the single values proportionally to the treatment capacity of each regarded plant. In result, fees and prices of larger plants have a higher impact on the mean values than fees and prices of smaller plants.

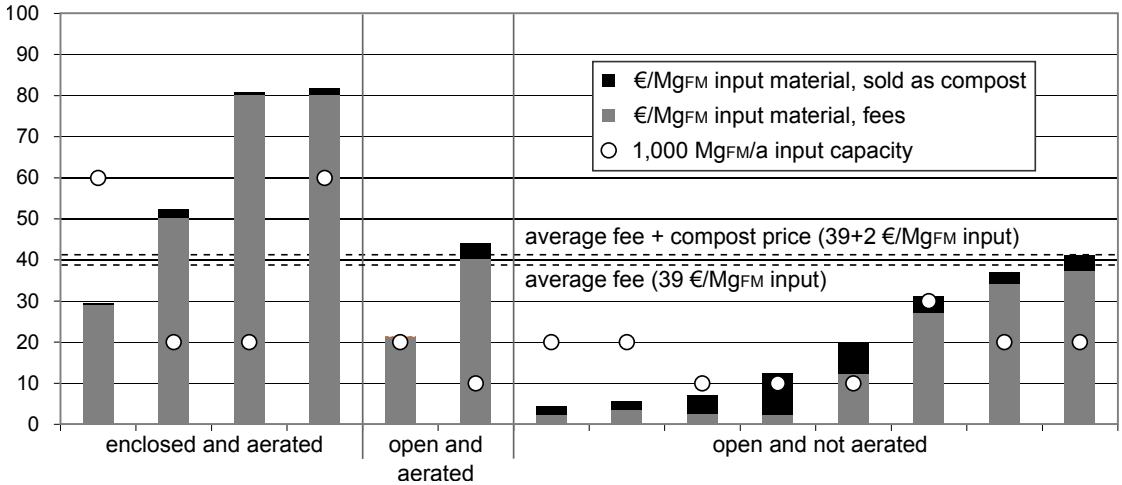


Figure 4.2: Capacities, fees and compost prices of 14 composting plants.

There is a visible tendency for highly technical plants — enclosed and aerated — to get higher fees for their services. One could also say their operation would not be possible with lower fees. At the same time, the income from compost sales seems to play only a minor role. With the technologically simpler plants — open and not aerated — this is different. The price for compost is much higher than for the closed and aerated plants, not only in relation to the fees, but also in total. The open and aerated plants seem to be in the middle between the other two categories. Since all these plants have to provide the same compost quality, regulated by the BGK, the prices would hardly relate to the product itself. Reasons for the need of higher input fees can be e.g., stronger regulations on air quality, or a difficult building ground, or the selection of a complex high-throughput plant, which all would increase investment and operating costs. The lower compost prices at more complex plants might result from relying on high treatment fees. However, there is no conclusive picture from the data given. Further investigations would be needed to figure out which factors affected the respective compost price. The main influence will probably be the demand for compost in the respective region of the plant. Also not conclusive is a possible relation between input capacity and fees and compost prices. Although the two biggest plants are also technologically more complex, it is apparent that most plants have capacities of around 20 000 Mg, independent of their type. One could conclude that, as long as the preconditions for the operation of an open and not aerated compost plant are given, and the annual amount of organic waste to be treated is not much more than 20 000 Mg, it is advisable to decide in favour of such a plant in order to reduce the waste collection fees for the citizens.

Interesting, and adding much heterogeneity to the data, are the five composting plants

with a total income of less than 20 € $Mg_{FM}^{-1}$ input — counting only the fees and compost sales. Such income might seem very low, but when simple technologies and existing building structures are used, they could be sufficient for a composting operation, especially when it is only one part of a business.

### 4.3.2 Objectives and System Boundaries

After having described some difficulties with establishing a sound material and energy balance, including the collection of economic data, the following discussion deals with different objectives and their influence on the choice for a system boundary, including the inclusion and exclusion of relevant data.

#### Economics

When new technologies arise, which are promising in solving one or another problem, their economic implementation depends not only on their inner quality, but also on existing market structures. These can slow down or completely prevent the success of a technology. Incentives, based on political decisions, shall compensate for that, in anticipation that the subsidized technology meets the expectations, related to the political objectives. While decisions for or against incentives might base on results of research, this would also work the other way around.

The easiest way to achieve the last mentioned is to choose a system boundary, which excludes data not in favour of one's objective. For example, considering only the material flow, while not looking at the energy flow. Biological treatment plants, producing mainly a material output like compost, would produce an economically more valuable product, than e.g., biogas plants. While such a procedure is not in line with life cycle thinking, it is done from time to time, e.g., mentioned below.

A more subtle way to exclude data is the comparison of hardly comparable figures. Probably less because of ill intent but because of lacking data that is more suitable. For example, taking the NPK-content of compost and calculate its monetary value in comparison with mineral NPK-fertiliser. While this is a good possibility to increase the public appreciation for compost, especially in times of rising costs for mineral fertilisers, it is worth discussing whether this is a good approach in general. Leifert and Schneider [2007] used this approach in addition with several other factors to determine the economic value of compost. They also mentioned, but not included, some older soil-related break-even analysis, where the compost price relates to the additional crop yield. This might be a more realistic approach, since world market prices for mineral fertiliser can be very volatile, and depend partly on equally volatile world energy prices. However, it is understandable that one prefers data for comparison, which are regularly updated and easily available, like mineral fertiliser prices. To collect enough usable data based on elaborate and time-consuming field trials on the other hand requires a lot of work force and considerable research funds.

### Energy and Material Cycles

When considering different objectives, one has not only to choose spatial system boundaries. For example, the comparison between the conversion of biodegradable waste to energy or to compost implies also a temporal component. While energy is a very volatile commodity, which can hardly be stored in the long-term, compost improves and preserves long-lasting soil, the basis of our civilisation. Yet, the partly substitution of fossil fuels with energy from waste biomass might slightly mitigate a climate change, which could also render the basic conditions of our civilisation. Because of these different implications, one has also to evaluate the temporal importance of objectives. For example, is it more important to stop the on-going degradation of soils right now, or should the priority lie in the slightly mitigation of a climate change, which will show its full effects in the decades to come? The answers to such questions form the basis for temporal system boundaries. Even if they were not clearly visible during an assessment, they would have an effect on the outcome of evaluations nonetheless.

EPEA [2008] followed an approach to extend system boundaries in the evaluation of different technologies. They included soil fertility, biodiversity, soil structure, climate protection, and protection from pollutant discharges. Because of this diversity, they obtained a completely different result concerning anaerobic digestion and composting than Rumphorst and Kübler [1996], who almost exclusively considered climate protection and related energy production. Beside general ecological assessments of waste management technologies, which are possible with LCA-models like EASEWASTE [DTU, 2012], it is sometimes necessary to incorporate specific details about geographical and economical situations into an assessment. For example, Schattner-Schmidt et al. [1996] included in their analysis of different composting technologies spatial structures. These are important when considering the sizes and allocation of plants and should be implemented in the comparison of composting, anaerobic digestion and combustion as well. Additional questions could tackle the necessary regional capacity of different technologies, considering, e.g., the need for compost or biogas of several regions, which might be quite different, now and in future. However, to pursue an objective concerning the optimal planning of regional economies, even more extensive system boundaries and more specific data would be required. It might even be necessary to expand the boundaries of the current waste management LCA's, which currently begin just after the creation of waste [Christensen, 2012], up to LCA's for the whole life cycle of products, and with that abandoning the segregated view on waste management.

## 4.4 Conclusions

The outcome of an assessment depends heavily on its objectives. It is easy to change the system boundaries in order to favour the chosen objective. Therefore, it is possible to provide an assessment in favour for one point of view or the other and both could be correct. In this context, it is hardly possible to determine the one value of composting.

To go further and compare different technologies, one has to choose a system boundary,

in which all relevant factors of every technology are included, usually leading to the extension of boundaries. These necessarily extensive boundaries will probably not be chosen, because relevant data are hard to come by. And even if that is done, e.g., with the help of LCA-models like EASEWASTE [DTU, 2012] every sound assessment of technologies, like composting, anaerobic digestion, and combustion is still based on decisions what currently is most important to the decision makers, e.g., ecology (LCA), energy safety, or economic costs.

## Acknowledgements

The Authors wish to thank the German Federal Ministry for the Environment, Nature Conservation and Nuclear Safety (BMU) for financial support of the project "Increasing the energy efficiency in biodegradable waste treatment" (FKZ-No. 03KB022B), within which the survey, used in this paper, was undertaken.

# 5 Organic Waste for Compost and Biochar in the EU

### Chapter equals original text:

Daniel Meyer-Kohlstock, Tonia Schmitz, and Eckhard Kraft. Organic Waste for Compost and Biochar in the EU: Mobilising the Potential. Resources, 4(3):457–475, 2015. doi:10.3390/resources4030457 

### Author Contributions

Tonia Schmitz provided Section 5.3 about the legal framework and examined the waste collection systems in Section 5.4. Daniel Meyer-Kohlstock contributed the abstract, the introduction (Section 5.1), and Section 5.2 about the organic waste potential and its use. The conclusions in Section 5.5 were revised by Eckhard Kraft. Daniel Meyer-Kohlstock wrote the paper.

## Abstract

While several EU member states have working compost markets, only about one third of the bio-waste, around 35 Mio tons is used to produce compost, and to some degree, biogas. The major part is still incinerated or landfilled together with other waste. This paper proposes the improvement of existing and the creation of new compost markets based on the integration of biochar and the implementation of obligatory recycling targets with flexible implementation approaches.

Based on a literature review, the production of compost with biochar reduces some of the nitrogen and carbon losses and accelerates the composting process. This indicates economical benefits for the compost producer and the farmer, as well as reduced greenhouse gas emissions. An obligation to recycle organic waste, may it be on a national or on EU level, together with the implementation of appropriate collection systems, could provide the economic and societal base to mobilize the currently unused bio-waste.

Should this scenario be realized, the annual amount of biochar-compost out of bio-waste could be used to serve around 3.7 % of all arable land in the EU. This would demand no large-scale application, but instead specific uses for specific soil-crop constellations.

## 5.1 Introduction

As a soil amendment, biochar can play a beneficial role in agriculture [Jeffery et al., 2011], as well as in numerous preceding processes [Schmidt, 2012]. However, fresh biochar has, depending on its feedstock and on the pyrolysis process, hardly any nutrients available and it can even immobilize them when added to a soil, resulting in crop losses. In addition, fresh biochar shows little tendency to support microbial diversity and abundance, a main feature found in the Terra Preta soils, on which the biochar research was initially based. Therefore, it makes sense to introduce fresh biochar to an environment rich in nutrients and microorganisms before applying it to soils.

A field-tested way to add nutrients and microbial life to biochar is its use as co-substrate in composting [Dunst, 2013; Yoshizawa et al., 2005]. While it is possible to mix biochar into matured compost, it yields more benefits when it is already introduced to the composting process. There, it accelerates the composting process and it even can reduce the losses of nitrogen and carbon [Sánchez-García et al., 2015; Xiang-Dong and Dong, 2014; Jindo et al., 2012; Steiner et al., 2010; Yoshizawa et al., 2006]. The resulting biochar-compost, rich in carbon, nutrients and microorganisms can have a high agronomical value. Of course, the value depends largely on the soil it is applied to and on the kind of crops produced on that soil [Schmidt et al., 2014a; Schulz et al., 2013]. As with every soil amendment, biochar-compost should not be applied on a massive scale, but specifically to the needs of the soil and the farmer, respectively the gardener.

In addition to turning a rather inert material very quickly into a beneficial soil amendment, this new product could easily be integrated into existing compost markets, since the application technology could remain the same. The only technical changes necessary would be on the production and on the quality assurance side. Yet, it is to mention that several EU member states, still lack the necessary waste managements regulations to establish a rudimentary compost market in the first place.

This paper intends to illustrate not only the potential for European biochar-compost markets based on organic waste, but also the necessary prerequisites. For this, the available feedstock for compost and biochar, as well as its current use is shortly reviewed. In a second step, the legal framework and various waste collection systems are highlighted to illustrate several barriers and solutions to establish working compost markets.

For a quick overview, the contents of the following chapters are shortly summarized.

- Section 5.2 Organic Waste Potential and Use:
  Graphical and tabular overview about theoretical potentials and their current use.
- Section 5.3 Legal Framework:
  The influence of EU legislation on the regional and local management of organic waste.
- Section 5.4 Waste Collection Systems:
  Case studies highlighting the key parts of a successful mobilisation of organic waste.
- Section 5.5 Conclusions:
  Summary of the previous chapters, including EU policy recommendations.

## 5.2 Organic Waste Potential and Use

This paper focuses on municipal organic waste for biochar and compost. Yet, organic residues from agriculture and forestry can be used as feedstock as well. Therefore, the analysis about municipal resources is followed by a short overview about agriculture and forestry.

### 5.2.1 Municipal Resources

The major part of organic waste for compost in the EU is bio-waste. It is defined by the Waste Framework Directive (WFD) [2008/98/EC] as "biodegradable garden and park waste, food and kitchen waste from households, restaurants, caterers and retail premises, and comparable waste from food processing plants". Accordingly, bio-waste does not include sewage sludge, paper, cardboard and wood. Especially sewage sludge could be partly integrated into composting processes — carefully taking into account its high water content and possible contaminations [Wei and Liu, 2005] — while for the other substrates different processes like paper recycling or energy recovery might be the ecologically and economically better alternative.

The theoretical potential of bio-waste can be extrapolated from waste analyses together with the reported amount of municipal solid waste collected. While the data for the amounts of waste collected in the EU is good, the situation is less informative for the available data on waste qualities. Especially the different analysis methods make it difficult to compare the results.

In 2010, Arcadis Belgium nv and Eunomia undertook the challenge to estimate the bio-waste potentials and their future development for each member state of the EU-27 [Arcadis, 2010]. Table 5.1 provides the detailed data of their estimates as well as their collected data on bio-waste utilization for compost and biogas in 2008. In contrast, Table 5.1 provides also Eurostat data regarding the bio-waste utilization for the EU-28 member states in 2008 and 2011. Both data sources cover aerobic (compost) and anaerobic (biogas) treatment, with the exception that the Arcadis study included also home composting (around 3 % of the total amount).

If the Eurostat data are correct, the 2010 study largely underestimated the bio-waste utilization. While Eurostat data adds up to 35.2 Tg in 2008, the Arcadis study estimated only 20.1 Tg. For 2011 Eurostat shows 34.1 Tg, while the Arcadis study for casted—not contained in Table 5.1—an amount of 24.6 Tg, including 3.1 % home composting.

Figure 5.1(a) illustrates in addition to Table 5.1 the bio-waste utilization not only on a national but also on a regional and local level. The visualized data are from national statistics, as well as from the Eurostat urban audit program and cover a time frame of around 10 years. Therefore, the data in Figure 5.1(a) is not identical to Table 5.1. The composed map rather highlights the diverse levels of success for bio-waste utilization. Sections 5.3 and 5.4 provide some reasons for the heterogeneity of the map.

In addition to the municipal bio-waste potential of around 88 $Tg_{FM}$, industrial sources such as food processing may provide another 30 $Tg_{FM}$ to 50 $Tg_{FM}$ of bio-waste [EC, 2010].

The municipal potential to produce biochar from organic waste depends mainly on the amount of green waste, *i.e.*, the woody part of bio-waste. If it is estimated that around 30 % of the supposed bio-waste potential (88 Tg) is green waste and that its conversion would yield 30 % biochar, than this would amount to around 8 Tg biochar. The remaining 61 Tg bio-waste could be composted together with this biochar, which would also function as structural material. Besides the production of a user-friendly compost-biochar blend, the biochar addition of over 10 % should also result in a measurable reduction of carbon and nitrogen losses during the composting process [Dunst, 2013]. Taking this into account, it could be estimated that the bio-waste would be converted into compost with loosing only nearly 50 % of its mass, resulting in a product consisting of 32 Tg compost and 8 Tg biochar. If this biochar-compost blend would be applied at a rate of 10 Mg ha$^{-1}$, which is 1 kg m$^{-2}$, then 4 Mio ha could be treated with this amount annually. This corresponds to 3.7 % of all arable land in the EU (around 108 Mio ha). While this means that only a small fraction of the arable land could be served with bio-waste compost, it implies also that agriculture should have no problems to take up this sustainable resource.

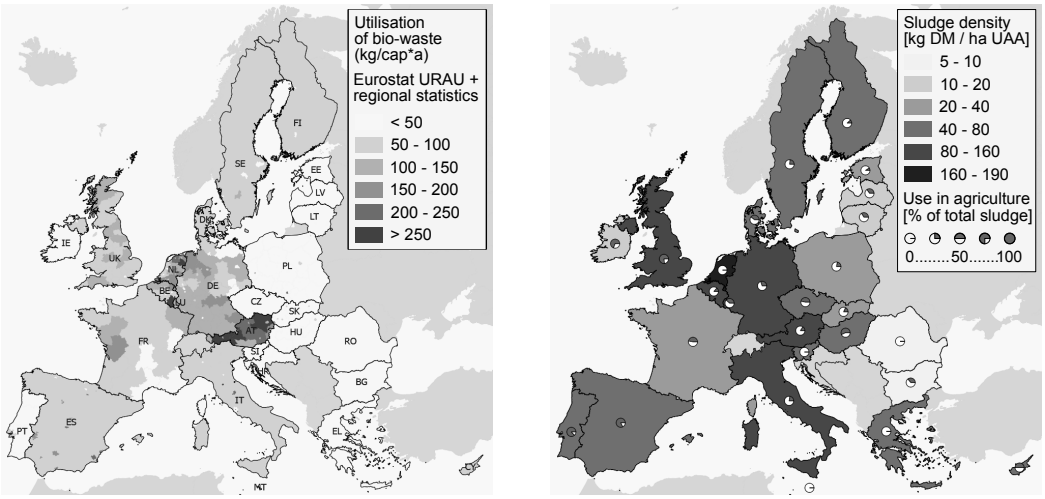


(a) (b)

Figure 5.1: Bio-waste and sewage sludge utilization in the EU-28 (data from Eurostat [Eurostat]). (**a**) Bio-waste utilization in kg per capita and year based on Eurostat Urban Audit and regional statistics; (**b**) Amount of sewage sludge in kg dry matter in relation to hectare utilized agricultural area; and agricultural sludge use.

Figure 5.1(b) provides the annual sludge potential from municipal wastewater treatment in kg dry matter per hectare of utilized agricultural area. Therefore, it represents the theoretical recycling potential of sewage sludge in agriculture. The actual utilization is given in percentage of the total annual amount. Table 5.2 contains all data used for Figure 5.1(b) and in addition the year of the data collection. For most member states corresponding data are available for 2008 or 2009, whereas the least current data is from

Table 5.1: Estimates and statistical data about the bio-waste potential and utilisation in the EU provided in 1000 tons (Mg) per year (a).

| **Member State** | | **Est. Potential of Bio-Waste [Arcadis]** | **Bio-Waste Utilisation (Composting and Anaerobic Digestion)** | | |
|---|---|---|---|---|---|
| | | | **[Arcadis]** | **[Eurostat]** | **[Eurostat]** |
| | | [Gg a$^{-1}$] **(2008)** | [Gg a$^{-1}$] **(2008)** | [Gg a$^{-1}$] **(2008)** | [Gg a$^{-1}$] **(2011)** |
| AT | Austria | 1 525 | 569 | 1 683 | *1 510 |
| BE | Belgium | 2 098 | 1 114 | 1 103 | 1 042 |
| BG | Bulgaria | 907 | 28 | 0 | 84 |
| CY | Cyprus | 130 | 0 | 0 | 48 |
| CZ | Czech Republic | 1 271 | 64 | *50 | *74 |
| DE | Germany | 16 979 | 8 490 | 8 082 | 8 498 |
| DK | Denmark | 1 273 | 554 | 606 | 486 |
| EE | Estonia | 350 | 31 | 28 | 35 |
| EL | Greece | 1 903 | 0 | 100 | 68 |
| ES | Spain | 9 776 | 479 | *6 158 | 2 272 |
| FI | Finland | 965 | 212 | 234 | 355 |
| FR | France | 12 453 | 498 | 5 581 | 5 703 |
| HR | Croatia | – | – | 15 | 14 |
| HU | Hungary | 1 592 | 493 | 85 | 183 |
| IE | Ireland | 712 | 85 | 107 | 157 |
| IT | Italy | 7 938 | 1 588 | 3 081 | *3 980 |
| LT | Lithuania | 493 | 89 | 15 | *23 |
| LU | Luxembourg | 88 | 57 | 68 | 62 |
| LV | Latvia | 269 | 0 | 5 | 8 |
| MT | Malta | 61 | 0 | 0 | 9 |
| NL | Netherlands | 2 703 | 1 324 | 2 330 | 2 360 |
| PL | Poland | 2 960 | 672 | 386 | *951 |
| PT | Portugal | 1 875 | 56 | 382 | 447 |
| RO | Romania | 4 006 | 92 | 3 | 15 |
| SE | Sweden | 1 905 | 528 | 597 | 653 |
| SI | Slovenia | 308 | 31 | 17 | 45 |
| SK | Slovakia | 546 | 22 | 80 | 100 |
| UK | United Kingdom | 12 630 | 3 789 | 4 402 | *4 922 |
| EU-28 | | 87 718 | 20 865 | 35 198 | 34 104 |

Note: * Eurostat estimates.

2000 and no data is available for Croatia. Thus, the data collection for wastewater sludge is a temporal aggregation, similar to Figure 5.1(a). Nonetheless, it can be concluded that roughly 45 % of the total municipal sludge is applied in agriculture. Another 10 % is composted, although the corresponding data is even more fragmentary. This would leave around 45 % or 4.6 $Tg_{DM}$ unused (incinerated or landfilled), which could potentially be converted to compost if enough bulking material in form of biochar or woody material would be available.

### 5.2.2 Agricultural and Silvicultural Resources

Although organic waste for compost mainly comes from urban areas, agriculture and forestry also have the opportunity to produce large amounts of compost and biochar-compost blends. Because this paper focuses on municipal organic waste, the following remarks are only about rough indicators which could be used as starting point for a dedicated discussion about agri- and silvicultural resources for biochar and compost.

Figure 5.2(a) and Table 5.2 provide the livestock density for all member states, except Croatia. The livestock unit (LSU) is a reference unit to aggregate livestock from various species and age, based on nutritional or feed requirements. One LSU is the equivalent of a grazing adult dairy cow, producing 3 000 kg of milk annually [EC, 2015].

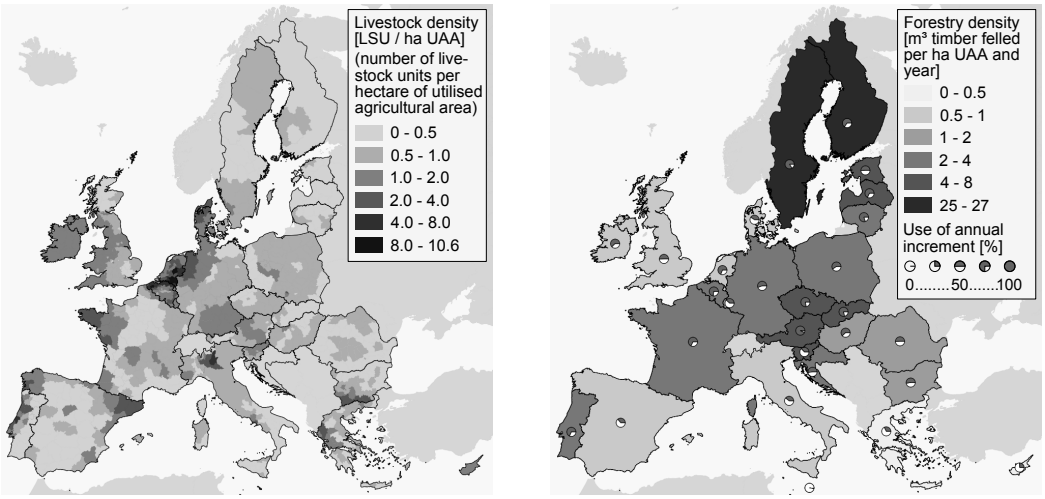


(a) (b)

Figure 5.2: Livestock density and timber use in the EU-28 (data from [Eurostat]) as indicators for agricultural and silvicultural residues.
(**a**) Livestock density; (**b**) Timber utilisation.

The livestock density relates to the potential feed production for livestock, as well as to the recycling potential of the accompanying manure. Where the density is high, surplus manure might be available for composting or biochar production since the agricultural area is too small to take up all the manure. While this would not reduce the current

Table 5.2: Indicators for the feedstock potential for biochar and compost in the EU-28 (data from [Eurostat]).

| MS | Pop. 2010 [1000] | UAA 2010 [1 000 ha] | LSU 2010 [1 000] | Municipal WW Sludge Total [$Gg_{DM}\ a^{-1}$] | Municipal WW Sludge Agri. Use [$Gg_{DM}\ a^{-1}$] | Municipal WW Sludge Year [20xx] | Timber Volume 2010 Increment [1 000 $m^3$] | Timber Volume 2010 Fellings [1 000 $m^3$] |
|---|---|---|---|---|---|---|---|---|
| AT | 8 375 | 3 166 | 2 517 | 254 | 40 | 08 | 25 136 | 23 511 |
| BE | 10 840 | 1 358 | 3 799 | 140 | 19 | 08 | 5 289 | 3 852 |
| BG | 7 564 | 5 052 | 1 149 | 39 | 14 | 09 | 14 677 | 7 781 |
| CY | 819 | 115 | 201 | 8 | 4 | 07 | 38 | 10 |
| CZ | 10 507 | 3 524 | 1 722 | 220 | 103 | 08 | 23 086 | 17 940 |
| DE | 81 802 | 16 704 | 17 793 | 1 957 | 589 | **09 | 107 000 | 59 610 |
| DK | 5 535 | 2 676 | 4 919 | 108 | 43 | 09 | 5 796 | 2 371 |
| EE | 1 340 | 949 | 306 | 22 | 2 | 08 | 11 201 | 5 714 |
| EL | 11 305 | 3 684 | 2 407 | 152 | 0 | 09 | 4 511 | 1 463 |
| ES | 45 989 | *24 190 | 14 831 | 1 205 | 995 | 09 | 45 842 | 16 577 |
| FI | 5 351 | 2 292 | 1 121 | 160 | 19 | 00 | 91 038 | 59 447 |
| FR | 64 659 | 29 311 | 22 674 | 1 087 | 512 | 08 | 94 367 | 64 316 |
| HR | 4 426 | 1 334 | 1 020 | – | – | – | 9 888 | 5 186 |
| HU | 10 014 | 5 343 | 2 484 | 260 | 148 | 07 | 11 099 | 6 899 |
| IE | 4 468 | 4 563 | 5 787 | 88 | 61 | 07 | 4 524 | 2 826 |
| IT | 60 340 | 12 885 | 9 912 | 1 056 | 236 | 05 | 32 543 | 12 755 |
| LT | 3 329 | 2 772 | 900 | 50 | 17 | 09 | 10 750 | 8 600 |
| LU | 502 | 131 | 168 | 13 | 5 | 08 | 650 | 249 |
| LV | 2 248 | 1 806 | 475 | 23 | 8 | 07 | 18 333 | 12 421 |
| MT | 414 | 11 | 42 | 1 | 0 | 09 | 0 | 0 |
| NL | 16 575 | 1 872 | 6 712 | 353 | 0 | 08 | 2 250 | 1 552 |
| PL | 38 167 | 14 603 | 10 377 | 563 | 123 | 09 | 68 519 | 40 693 |
| PT | 10 638 | 3 632 | 2 206 | 189 | 164 | 07 | 19 087 | 13 042 |
| RO | 21 462 | 14 156 | 5 444 | 120 | 0 | 09 | 33 984 | 17 232 |
| SE | 9 341 | 3 074 | 1 752 | 212 | 50 | 09 | 96 486 | 80 900 |
| SI | 2 047 | 483 | 518 | 27 | 0 | 09 | 9 165 | 3 401 |
| SK | 5 425 | 1 922 | 668 | 56 | 10 | 05 | 13 193 | 10 418 |
| UK | 62 027 | 17 234 | 13 308 | 1 814 | 1 394 | ***08 | 20 700 | 10 500 |
| EU | 505 510 | 154 651 | 135 212 | 10 177 | 4 556 | | 779 152 | 489 265 |

Notes: * value for 2009; ** data from [Destatis, 2015]; *** includes data for Scotland from 2005; MS = member state (as country code of the EU Nomenclature of Territorial Units for Statistics); UAA = utilised agricultural area (in 1000 hectare); LSU = live stock unit, an equivalent of a grazing adult dairy cow (in 1000); WW = waste water sludge (in 1000 tons dry matter per year).

surplus of nutrients, it could transform them into more stable forms. In the long term this should reduce the risks of nutrient leaching [Wang et al., 2013; Khan et al., 2014; Jia et al., 2015] and therefore increase the crop yields. In this hypothetical scenario, where biochar-compost is applied instead of manure, the productivity of the land could slightly level up to the intense livestock farming and alleviate the need for manure exports or reductions of the livestock density.

Figure 5.2(b) and Table 5.2 provide the amount of timber felled compared to the utilized agricultural area. This can be used as an indicator for available amounts of forest residues for biochar production, or even for a combined biochar-bioenergy production. Since biochar can yield far higher sales prices than compost, the export of biochar throughout the EU internal market would be economically viable. A look at the current trade flows for charcoal in Europe [FAOSTAT, 2014] supports this assumption. Therefore, countries with a large forestry sector but comparatively small agricultural sector, like Sweden and Finland, could provide a large amount of the biochar feedstock from forestry residues. However, this depends strongly on the existing utilization of timber and on the current management systems.

## 5.3 Legal Framework

When considering the fate of bio-waste, mainly three EU Directives influence the quantities and qualities available for further uses, such as the production of compost or biochar.

By regulating the disposal of inert, hazardous and non-hazardous waste, the Landfill Directive [1999/31/EC] aims at preventing and reducing the negative effects of landfilled waste on the environment in the short as well as in the long-term perspective. For this purpose, several procedural and technical measures improving waste management are declared mandatory. Above all, to limit leachate and methane emissions, each member state is compelled to develop a national strategy for the reduction of biodegradable waste going to landfills by enhancing separate collection, recycling, composting, biogas production and material/energy recovery. To achieve measurable progress, each country shall gradually reduce the amount of biodegradable municipal waste going to landfills by 25 % in 2006, by 50 % in 2009, and by 65 % in 2016, compared to the total amount of biodegradable municipal waste produced in 1995. However, an exception was made for member states that landfilled over 80 % of their municipal waste in 1995, namely the UK, Greece and the 10 member states joining the EU in 2004, as well as Bulgaria and Romania joining the EU in 2007. These countries have to reach the respective target values within a 4 year extension, respectively in 2010, 2013 and 2020.

Unfortunately, the Commission had to report that in 2009 "the overall implementation of the Directive remains highly unsatisfactory" [EC, 2009]. Ten years after the adoption of the Directive, the majority of the member states did neither meet the deadlines for the diversion of biodegradable municipal waste from landfills, nor the reduction of landfill emissions, nor the overall improvement of their waste management systems. Nonetheless, due to the fines the commission can impose, this Directive makes the landfilling of biodegradable waste financially unattractive and thus contributes to the

recycling of bio-waste.

In addition to these restrictions on landfilling, member states are compelled by the Waste Framework Directive [2008/98/EC] to develop national waste management plans in line with the following waste hierarchy: prevention, preparing for reuse, recycling, other recovery, e.g., energy recovery, disposal. More specifically, the Directive stipulates that by 2015, separate collection is to be set up for paper, metal, plastic and glass. By 2020, the amounts of these waste types being recycled or reused are to be increased by at least 50 % (by weight). Further on, member states shall take measures to encourage the separate collection of bio-waste as well as to promote environmentally sound treatment and application methods for it. However, as no specific reduction target has been set, the overall impact of the Directive on bio-waste management might remain limited.

By contrast, the "Biofuels-Directive" [2009/28/EC] is strongly influencing the overall handling of bio-waste. member states are compelled to develop national action plans allocating specific renewable energy shares for the transport, the electricity and the heating sector. By setting specific target values for each member state, the Directive aims to reduce primary energy consumption as well as greenhouse gas emissions by 20 % and to include 20 % of renewable energy in the overall supply by 2020 ("20-20-20 goal"). In addition, the transport sector shall increase its renewable energy share to at least 10 % of its total consumption by 2020. From January 2017 on, a reduction of greenhouse gas emissions of 50 % is to be achieved. Since this Directive considerably increases the demand for biomass in the energy sector, it necessarily reduces its availability as feedstock for compost or biochar. While energy can be recovered from pyrolysis or from a prior anaerobic digestion of bio-waste, there is always an underlying competition between carbon for soil and carbon for energy. Depending on what is most wanted, based on regulation induced market prices, the process conditions can be adjusted to produce a maximum of this or that. When carbon is primarily turned into pyrolysis gas or into biogas, then that share is lost for the soil.

European legislation is implemented and generally refined in national laws and regulations by the definition of more specific targets. When considering the production and handling of compost, it becomes clear that the member states have developed substantially different regulations. Some countries defined end-of-waste criteria; others still regard compost as waste while nevertheless allowing its use as an agricultural soil improver. In each member state, different threshold values for the contamination of compost with heavy metals or glass/plastic particles were set (see Figure 5.3(a) and Figure 5.3(b) for the threshold values for lead and cadmium), through legislation or quality assurance organizations. Several of the latter are members of the European Compost Network, which also developed a European Quality Assurance Scheme (ECN-QAS) [ECN, 2015]. This was done to provide consistent quality standards for compost in regard to ongoing revisions of EU agricultural and environmental regulations.

For biochar, two major certification schemes exist. The first is the Swiss based European Biochar Certificate [EBC] and the second is the certification programme of the US based International Biochar Initiative [IBI]. Since 2012, when both standards were first published, IBI and EBC collaborate in the further development of their certification

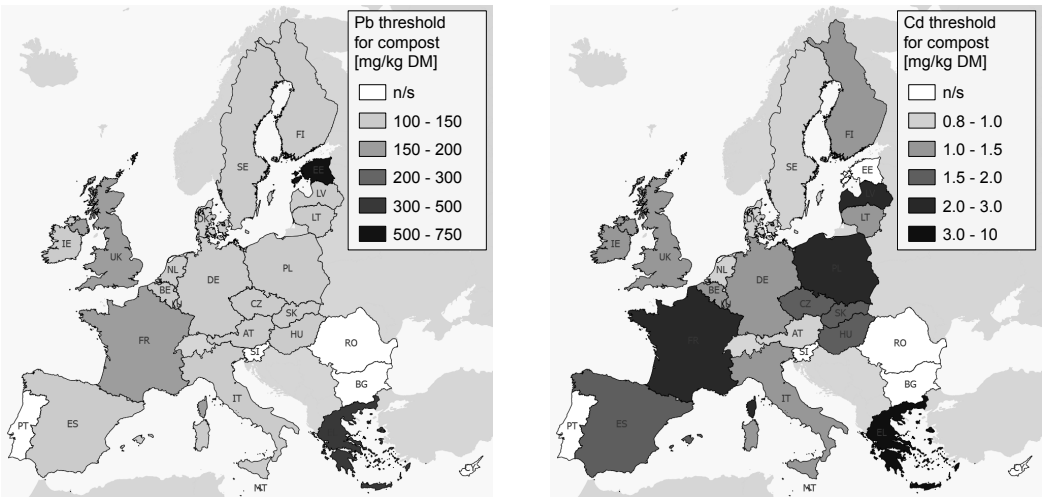


(a) (b)

Figure 5.3: Lead and Cadmium thresholds for compost in the EU-27 (data from Barth et al. [2008]). (**a**) Lead threshold in mg/kg dry matter; (**b**) Cadmium threshold in mg/kg dry matter.

and guidelines, taking national and continental differences into consideration [European Biochar Foundation, 2015]. How these certification schemes will be regarded in the revision of national and EU regulations remains to be seen. However, based on the positive experience with voluntary compost certifications and their influence on the establishment of compost markets [Meyer-Kohlstock et al., 2013; ECN, 2015], it would make sense to recognize their potential role.

## 5.4 Waste Collection Systems

As can be seen in the following case studies, the collection services offered by a municipality have a large impact on the quantities and qualities of the collected bio-waste. When a city only provides for a mixed waste collection, some citizens may start home-composting, but most will likely just dispose of their recyclables (including bio-waste) with the residual waste. If these recyclables are to be used as feedstock for further uses, they first need to get separated from the residual waste stream in extensive pre-treatment processes. At the end of this chapter such a solution for partly mixed municipal waste in France is presented. However, in most member states with a composting sector, source separation is the chosen method.

For given framework conditions the case studies highlight different appropriate solutions. It can be concluded that:

- Citizens provide separated bio-waste in high quality and quantity if provided with a comfortable and transparent collection system, based on:

short ways and simple separation rules, extensive promotion of source separation and appropriate collection intervals

- How collection systems are technically implemented depends largely on the economic framework and on the existing infrastructure, for example:
  housing density, road space and labor costs

- High quality input material for composting can also come from mixed collection if: hazardous waste, like batteries, is strictly collected separately and mixed waste is pre-treated with sophisticated separation systems

### 5.4.1 Large Wheeled Bins in Germany

In Germany, bio-waste is usually collected together with green waste in large wheeled bins (120 L to 240 L), only differing by color from the conventional residual waste bins. Accordingly, one single fleet of conventional waste collection vehicles can be used for both the bio- and the residual waste collection. Furthermore, municipalities often increase the cost efficiency of their fleet by applying an alternating collection system for both waste types: as most municipalities provided a weekly collection of residual waste in the past, switching to an alternating fortnightly collection of bio- and residual waste does not increase the collection costs. [Gallenkemper and Doedens, 1994]

However, the long collection intervals have led to some protests from citizens fearing hygienic issues and bad smells — even though several decades of daily practice have shown that a properly used bio-waste bin does not need to be a nuisance after 14 days in Germany's climate. Additionally, even if bad smells occur, hygienic risks are highly unlikely [Gallenkemper and Becker, 1996]. Nonetheless, most municipalities made the concession to provide weekly bio-waste collections during the summer months [Gallenkemper and Doedens, 1994].

Others even chose a more sophisticated system to spare their citizens to adapt to new collection intervals. Drolshagen for instance, a small German town with 12 000 citizens, provides a combined collection of residual and bio-waste in two chamber bins (MEKAM-System) [Stadt Drolshagen, 2013]. These bins can be emptied using special collection vehicles separated midway into two compartments. Both chambers can thus be loaded, compacted and emptied separately. However, despite its popularity among the citizens — less space required for waste bins, frequent collection — the MEKAM-system is still rather uncommon in Germany. The spread of bin weighing to calculate individual fees, which is not possible if one bin contains two differently charged waste fractions, will reduce the number of MEKAM-systems further. In addition, the trend for unified collection systems on district level will also likely eliminate such specific systems.

### 5.4.2 Small Portable Waste Bins in Northern Italy

Until 2010, about 87 % of the northern Italian municipalities had implemented a comprehensive waste management system including the separate collection and treatment of organic residues [Lanz et al., 2012]. According to Favoino [Favoino and Ricci, 2006], one of

the major challenges was to offer a user friendly and affordable collection system, as most citizens were accustomed to very high collection frequencies for their residual waste. This is typical for southern countries, as they are confronted with the accelerated putrefaction of organics as a result of the warm climate. To achieve high participation and diversion rates, most municipalities therefore chose to adapt the food waste collection interval to the habitual residual waste collection interval: twice per week, while some municipalities even increased the collection frequency to 4 times per week in summer [Ricci-Jürgensen et al., 2012].

Due to these short collection intervals, the northern Italian system had to be particularly cost-efficient, while also being user-friendly. Each household has been provided with two small bins (5 L to 10 L kitchen bin and 20 L to 30 L outdoor bin) to be used with inlays made out of paper or biodegradable plastic. Some municipalities even distributed vented bins with semi-permeable bio-plastic bags specifically conceived for the food waste collection. These bags are permeable for water steam, but not for liquid water. By allowing the water to evaporate, the bio-plastic bag reduces bio-degradation in the waste bin and thereby reduces odor emissions. [Favoino and Ricci, 2006; Ricci-Jürgensen et al., 2012].

Independent of the type of bag used, the bio-waste is collected with small bulk lorries fitting through the narrow streets of Italian cities. Due to its high density ($0.6\,\mathrm{kg\,L^{-1}}$ to $0.8\,\mathrm{kg\,L^{-1}}$), food waste does not need compaction – besides, since the investment and maintenance costs for large waste compaction vehicles are substantially higher than for simple lorries, the latter are economically advantageous for the municipalities. Furthermore, the small bio-waste bins can easily be emptied by hand, which is 4 to 8 times faster than emptying a bin with a mechanical device. Nonetheless, to service large food waste producers, some lorries have been equipped with a mechanical device allowing the additional collection of wheeled road containers used by canteens, restaurants or residents of larger apartment buildings [Favoino and Ricci, 2006].

Altogether, the user-friendly system as well as the high collection frequencies provided by northern Italian municipalities reduced the organic matter content in the residual waste to less than 15 % [Favoino and Ricci, 2006]. Nonetheless, it is important to note, that this system is not economically reasonable for the joint collection of food and garden waste, since the latter typically has a rather low bulk density ($0.15\,\mathrm{kg\,L^{-1}}$ to $0.30\,\mathrm{kg\,L^{-1}}$) and should thus be compacted prior to transportation [Favoino and Ricci, 2006]. As a result, many Italian municipalities chose to promote home-composting of garden waste.

### 5.4.3 Roadside Containers in Catalonia

In Catalonia, an autonomous region in Spain, most municipalities collect all recyclables (bio-waste, glass, paper and packaging) separately in 240 L to 1 100 L roadside containers. The collection frequency generally ranges between three to four times per week, or even daily in some urban centres during the summer months. However, according to Giro [2003], this roadside collection achieves only poor results, which is detailed in Table 5.3.

Furthermore, the containers are often highly unpopular as they take up a lot of public space and are considered a nuisance because of the dirt and smells in their vicinity.

Table 5.3: Comparison of collection performance between roadside and door-to-door collection in Catalonia, according to Giro [2003].

| **Performance Indicator** | **Roadsite Collection** | **Door-to-door Collection** |
|---|---|---|
| overall diversion rate for recyclables | 15%–20% | 60%–85% |
| bio-waste per inhabitant and day | 100–150 g | 300–400 g |
| bio-waste impurities | 10%–15% | 3%–5% |

As a result, some municipalities have implemented a door-to-door collection for recyclables, analogous to the Italian model for bio-waste. The frequency of collection has been slightly reduced to three times per week in general and four times per week in summer. As can be seen in Table 5.3, the door-to-door collection achieves significantly better results than the roadside containers.

Altogether, roadside containers in public spaces in Catalonia seem to be rather ineffective in providing high participation rates for the collection of recyclables. Nevertheless, it should be considered that some of their drawbacks, such as the occupation of public space or the odor nuisance, could effectively be reduced by installing underground containers.

### 5.4.4 Vacuum Pipes in Stockholm, Sweden

The city of Stockholm, elected "European Green Capital" in the year 2010, aims to increase the amount of food waste separately collected and treated from 11 % in 2010 [Millers-Dalsjö and Lundborg, 2012] to at least 40 % by 2050 [Avfall Sverige, 2012]. To facilitate the separate collection and to increase the food waste diversion rate, two pneumatic collection systems have been installed throughout the city and in some residential areas [ENVAC, 2011].

Single large food waste producers or small residential areas are connected to a pipe system collecting different waste fractions through input inlets, installed for instance in a restaurants' kitchen or a central courtyard. Underneath each inlet is a small storage tank connected via an underground pipe to a docking point situated at a maximum of 300 m from the inlet. To collect the waste, a vehicle equipped with a vacuum generator simply connects to the docking point and draws the waste out from the different storage tanks.

Both systems have the advantage that the inlets are not considered as annoying as smelly waste bins and that they can therefore be placed in exposed, central locations such as the hallway of a building, courtyards or even playgrounds. This not only provides a good accessibility of the waste inlets, but also ensures a social check on each one's recycling practice.

Both the mobile and the stationary pipe systems are quite popular and might even increase the value of the properties — not least because of their good accessibility for elderly or physically disabled persons [ENVAC, 2011].

### 5.4.5 Mixed collection in Launay-Landic, France

Since the Landfill Directive (1999/31/EC) made it compulsory to reduce the amount of biodegradable waste going to landfills, mechanical-biological treatment of municipal solid waste (MSW) has become a rather common process in Central Europe [Steiner, 2006]. However, only a few countries (above all France, Spain and Italy) actually try to gradually improve the quality of the MSW composts produced to allow their use as a soil amendment in agriculture. Until recently, the quality of the recycled materials, including the compost, was very poor, since most plants used hammer mills or shredders as a first treatment step to reduce the particle size of the incoming MSW. Thus, the resulting compost was often heavily contaminated with heavy-metals (for instance due to the shredding of batteries [Riber et al., 2009]) and glass/plastic particles too small to be screened out. [Slater and Frederickson, 2001]

Nowadays, French MSW composting plants achieve remarkably low contamination levels, as can be seen in Table 5.4. It displays the heavy-metal values measured in 2012 in the composts from plants processing MSW and from plants processing bio-waste, together with older values for European composts published in 2004 [Amlinger et al., 2004]. According to these, huge progress has been made in MSW composting: whereas in 2004, MSW composts exceeded every single heavy metal threshold set in the German bio-waste ordinance [BioAbfV], all recent values (except for copper) lie distinctly below. This is worth mentioning, because the relevant French compost standard NF U 44-051 (in force since 2009) has higher thresholds for all heavy metals. Even the Cerafel agreement between compost producers and vegetable growers in Brittany has higher thresholds for some heavy metals.

Table 5.4: Heavy-metal threshold and contamination values for European composts.

| **All in** $mg\,kg_{DM}^{-1}$ | **Bio-AbfV** [BioAbfV] | **EU Composts from: MSW** [Amlinger et al., 2004] | **Bio-Waste** [Amlinger et al., 2004] | **French Thresholds for: NF U 44-051** [Zdanevitch, 2012] | **Cerafel** [Zdanevitch, 2012] | **French Composts from: MSW** [Zdanevitch, 2012] | **Bio-Waste** [Zdanevitch, 2012] | **Launay** [Briand, 2013] |
|---|---|---|---|---|---|---|---|---|
| As | | | | 18 | | 2.96 | 4.9 | 4.8 |
| Cd | 1.5 | **2.7** | 0.5 | **3** | 1 | 1.01 | 0.5 | 0.5 |
| Cr | 100 | **209** | 23 | **120** | 100 | 40.02 | 24 | 24 |
| Cu | 100 | **247** | 45 | **300** | **300** | **122** | 60 | 84 |
| Hg | 1 | **1.3** | 0.14 | **2** | 1 | 0.37 | 0.2 | 0.2 |
| Ni | 50 | **149** | 14.1 | **60** | 50 | 28.16 | 17 | 15 |
| Pb | 150 | **224** | 49.6 | **180** | 100 | 108.9 | 47 | 46 |
| Zn | 400 | **769** | 183 | **600** | **600** | 356.1 | 198 | 245 |

Note: Values which exceed the German Bio-Waste Ordinance [BioAbfV] are marked **bold**.

Thus, when considering the heavy-metal contamination in European composts, the technical state of the art in mechanical-biological waste treatment seems to enable the production of high quality composts comparable to composts produced from source separated bio-waste (see Table 5.4). The case of the MBT plant operated by SMITOM in Launay-Landic illustrates how this can be achieved.

The plant pre-treats the municipal solid waste stream within two Rotating Drum Reactors (RDR). These RDR, installed in most modern MBT plants, are equipped with

sharp knives in the inside to slit plastic bags open and reduce the particle size of all fractions (paper, glass, plastic, and organics) in order to facilitate the following mechanical sorting processes. In the plant of Launay-Landic the waste remains for 3.5 days in the rotating drum reactor and is afterwards screened (30 and 150 mm) and classified using magnetism, ballistics and additional screening (at 10 mm) [Morvan and Blanquart, 2009]. After the biological treatment of the organic fraction in windrows, the compost is sold:

- at 15 € $Mg_{FM}^{-1}$ to small buyers (< 10 Mg);
- at 3.81 € $Mg_{FM}^{-1}$ to medium sized buyers (10 Mg to 100 Mg) and
- at 2.28 € $Mg_{FM}^{-1}$ to large buyers (> 100 Mg) [SMITOM, 2013].

The achieved prices are rather high, when compared to the average selling price of 4 € $Mg_{FM}^{-1}$ for certified (RAL) bio-waste compost in Germany [Meyer-Kohlstock et al., 2013]. It could be argued that these high prices can only be justified by the composts high quality and low contamination levels (see Table 5.4). However, this is not only the result of the improved mechanical processing technology, but above all of the community's effort to participate in the source separation of inert recyclables and most importantly, toxic materials. This is being extensively promoted by the authorities of Launay-Landic in community meetings, learning classes at schools and via brochures explaining the limits of the waste treatment facilities [SMITOM, 2013].

## 5.5 Conclusions

Regarding compost production in the EU, only about 35 $Tg_{FM}$ of bio-waste — *i.e.*, one third of the potential feedstock available — is currently used. Around 5.5 $Tg_{DM}$ of 10 $Tg_{DM}$ sewage sludge is currently used in agriculture, directly or after composting. The remaining amount could provide additional feedstock for composting, provided that contamination with heavy metals or persistent organic compounds do not exceed threshold limits for safe composts.

Based on this, there remains a large potential for compost production in the EU. However, the distribution of compost producers varies greatly between and even within EU member states. Therefore, some areas have more potential to improve their recycling rates than others.

The woody part of bio-waste, *i.e.*, green waste would suffice to produce enough biochar for biochar-compost blends based on the whole bio-waste potential. Although not the focus of this paper, the potential of forestry residues for biochar was shortly discussed, as well as the agricultural resources to produce compost.

Regarding the legal framework for biochar and compost, it can be concluded that several EU regulations support the recycling of organic waste. However, based on the review of the unused waste potential, three recommendations were formulated to improve the current legislation:

- Obligatory rules to treat municipal organic waste are necessary to increase recycling rates. The current market for compost is characterized by low prices and heavy subsidies (waste fees) for its production. Therefore, the current plans for a revised Fertilizer Regulation with harmonized trade regulations and End-of-Waste criteria will hardly boost organic waste recycling under this circumstances.

- Obligatory information on biochar and compost products — input material, origin, substrate composition, and also directions for use — could strengthen responsible consumption and consumer trust. Such labelling could easily be regulated on EU level, e.g., in the revised Fertilizer Regulation, without interfering much in heterogeneous national regulation approaches.

- Voluntary certification schemes should be recognized and possibly supported. They could cover aspects which are not easily included in regulations for the whole EU internal market. Examples are premium quality standards or the support of local economic circles. Especially new innovative operations could profit from the resulting customer loyalty and would have the potential to introduce innovations to the whole market.

The provided case studies about bio-waste collection and pre-treatment systems highlight a diversity of specific solutions for different circumstances. While there cannot be one optimal collection system for the whole EU, it is possible to transfer certain successful strategies to other regions with similar circumstances. This could optimize the multitude of existing systems and would increase the utilization of the available bio-waste.

The same approach of exchanging knowledge about successful strategies could be recommended for the utilization of sewage sludge and specific organic wastes from the food industry. Also for currently unused organic residues in agriculture and forestry it should be equally useful to allow for specific approaches and to support the exchange between regions.

## Acknowledgments

This paper was written within the project FERTIPLUS (Grant Agreement No. 289853), which is co-funded by the European Commission, Directorate General for Research & Innovation, within the 7th Framework Programme of RTD, Theme 2 - Biotechnologies, Agriculture & Food.

The views and opinions expressed in this paper are purely those of the writers and may not in any circumstances be regarded as stating an official position of the European Commission.

The authors thank the reviewers for their constructive critique and express their gratitude to the European taxpayer, who made this work possible.

# 6 Biochar as Additive in Biogas Production from Bio-Waste

### Chapter equals original text:

Daniel Meyer-Kohlstock, Thomas Haupt, Erik Heldt, Nils Heldt, and Eckhard Kraft. Biochar as Additive in Biogas Production from Bio-Waste. Energies, 9(4):247, 2016. doi:10.3390/en9040247 

### Author Contributions

Daniel Meyer-Kohlstock and Thomas Haupt conceived and designed the experiments; Erik Heldt, Nils Heldt and Daniel Meyer-Kohlstock performed the experiments and analyzed the data; Eckhard Kraft contributed materials, analysis tools, and good advice; Daniel Meyer-Kohlstock wrote the paper.

## Abstract

Previous publications about biochar in anaerobic digestion show encouraging results in regard to increased biogas yields. This work investigates such effects in a solid-state fermentation of bio-waste. Unlike in previous trials, the influence of biochar is tested with a setup that simulates an industrial-scale biogas plant. Both the biogas and the methane yield increased around 5 % with a biochar addition of 5 % — based on organic dry matter biochar to bio-waste. An addition of 10 % increased the yield by around 3 %. While scaling effects prohibit a simple transfer of the results to industrial-scale plants, and although the certainty of the results is reduced by the heterogeneity of the bio-waste, further research in this direction seems promising.

## 6.1 Introduction

In 2014 Germany had 8 726 biogas plants with a combined electric capacity of 3 905 $MW_{el}$ [German Biogas Association, 2015]. Although this corresponds to only 4.3 % of the total renewable capacity [BNetzA], these plants play a vital role as base load provider within the mix of electricity. Therefore, an additive that could increase their yields would be important for a transition to renewable energies.

Biochar is pyrolysed biomass intended for soil improvement, though its use in numerous preceding processes, e.g., as feed supplement or silage additive, is possible [Schmidt, 2012]. Because of its inert and hydrophobic nature, the surface of fresh biochar has no tendency

to interact with microorganisms, nutrients, or water, the main features of this soil improver. While this changes gradually over time within the soil, this process can be accelerated by a pre-treatment through adding it as co-substrate to composting [Yoshizawa et al., 2005; Dunst, 2013]. Side benefits of this addition can be the reduction of nitrogen and carbon losses, as well as the acceleration of the composting process itself [Yoshizawa et al., 2006; Steiner et al., 2010; Jindo et al., 2012; Xiang-Dong and Dong, 2014; Sánchez-García et al., 2015; Vandecasteele et al., 2016].

Another option to pre-treat fresh biochar would be its addition to anaerobic digestion. While no investigation was done yet how this influences the agronomic properties of the resulting biochar-enhanced digestate, it was investigated how it influences the biogas production. Several authors have done laboratory trials to determine effects on the methane yield — the main combustible component of biogas — and the results ranged from –8 % up to +31 % [Kumar et al., 1987; Inthapanya et al., 2012; Inthapanya and Preston, 2013; Rödger et al., 2013; Mumme et al., 2014; Velghe, 2015]. A detailed overview including the results from this paper provides Section 6.3 Discussion.

In Germany, both pre-treatment options for biochar could often be realised at the same location. This is due to two facts. First, the German Renewable Energy Act (EEG) sets a favourable feed-in tariff for electricity from bio-waste, respectively the organic fraction of municipal solid waste (OFMSW), which is currently at 15.26 eurocent $kWh^{-1}$ for a rated power up to 500 kW and 13.38 eurocent $kWh^{-1}$ up to 20 MW [EEG, 2014]. Second, the EEG requires in the same article that the resulting digestate has to be processed into compost at a facility directly connected to the biogas plant. Therefore, these plants are usually part of an earlier established composting facility.

The first biogas plants for bio-waste were installed in Germany in the 1990s. The steady addition of new plants gained more speed at the end of the 2000s, which can be attributed to new municipal initiatives in terms of energy and climate policies, as well as to revisions of the EEG favoring such facilities. In 2014 there were 75 bio-waste-to-biogas plants with annual inputs over 5 000 Mg in operation. Together they digest 1 900 000 Mg bio-waste per year, which is only around one third of the available bio-waste suitable for such a treatment. In terms of energy, they provide a capacity of 52 $MW_{el}$ and six facilities feed biogas into a gas grid. [Kern and Raussen, 2014, p 19] While this seems low compared to the overall biogas capacity, it plays a vital role in the waste management efforts to recover energy.

Against this background it seemed worthwhile to investigate for the first time the influence of biochar on the anaerobic digestion of bio-waste. To raise the investigations significance for industry, the laboratory trial simulated the operations of a bio-waste-to-biogas plant in Erfurt, Germany (see Section 6.4 Materials and Methods). The trial results, which show a slight increase in the methane yields, lead to two conclusions. First, biochar can be pre-treated in a bio-waste-to-biogas operation, without disrupting the anaerobic digestion. Second, further investigations are necessary to determine optimal biochar qualities and rates for higher yields, as well as the effects on the subsequent composting process, including the effects on the agronomic qualities of the final compost.

## 6.2 Results

The trials with biochar in solid-state fermentation of bio-waste show a small increase in biogas and methane yields. Figure 6.1 reflects the cumulative yields over time for all three triplicates (biochar addition of 0 %, 5 %, and 10 %). The curves show a typical progress in anaerobic digestion, beginning with $CO_2$-rich biogas, slowly increasing methane production, to later crossing the reverse point of a short exponential growth and to finally reaching the plateau phase with very low methane production. In addition to the observation that the triplicates show only small yield variations, the progress of the yields is also very similar.

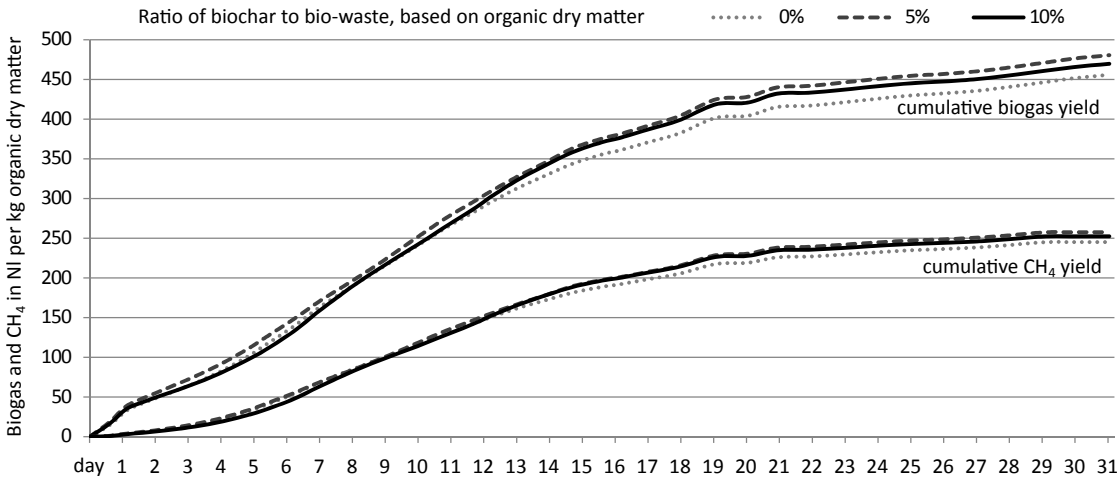


Figure 6.1: Cumulative biogas and methane ($CH_4$) yields; mean averages.

Table 6.1 provides the conversion of the reactor yields on day 30 into yields per kg organic dry matter (ODM), which are also visualized in Figure 6.2. This is done by dividing the total yields by the ODM of bio-waste, digestate and percolate in one reactor (see Section 6.4.2 Trial Substrates). The ODM of the biochar is not included, since it is considered to be not digestible within the trial duration.

Table 6.1 provides also the biogas yield from bio-waste alone by subtracting the biogas potentials of digestate and percolate, which were determined separately. The result of the subtraction is then divided by the bio-waste ODM. Because the methane content of the percolate biogas was not determined, the specific methane yield for bio-waste could not be calculated. However, one can expect that the influence on the mean change of a triplicate would be low, similar to the biogas results (+5.5 % *vs.* +5.6 % and +3.1 % *vs.* +3.2 %).

Figure 6.2 visualizes the biogas yields per kg organic dry matter. It is easy to spot reactor 1-3 as the one with the highest yield. This is the reason why the triplicate with the 5 % biochar addition (reactors 1-1, 1-2, and 1-3) has the highest mean yield in biogas and methane. Also, the relative standard deviation (coefficient of variation) within this triplicate is high (7.7 %), compared to the 10 % biochar addition (2.2 %) and

Table 6.1: Biogas and methane ($CH_4$) yields in total and per organic dry matter (ODM).

| **Parameter** | **Unit** | **control without biochar** | | | **5% biochar addition** | | | **10% biochar addition** | | |
|---|---|---|---|---|---|---|---|---|---|---|
| Reactor | | 0-1 | 0-2 | 0-3 | 1-1 | 1-2 | 1-3 | 2-1 | 2-2 | 2-3 |
| $\text{Biogas}_{total}$ | NL | 479.0 | 475.1 | 477.5 | 491.6 | 472.4 | 546.2 | 498.7 | 497.8 | 480.0 |
| $\text{Biogas}_{total}$ | $\text{NL kg}_{\text{ODM}}^{-1}$ | 453.3 | 449.6 | 451.9 | 465.2 | 447.0 | 516.8 | 471.9 | 471.0 | 454.2 |
| Mean change | % | | — | | | + 5.5 | | | + 3.1 | |
| $\text{Biogas}_{digestate}$ | NL | 9.7 | 9.7 | 9.7 | 9.7 | 9.7 | 9.7 | 9.7 | 9.7 | 9.7 |
| $\text{Biogas}_{percolate}$ | NL | 3.4 | 3.4 | 3.4 | 3.4 | 3.4 | 3.4 | 3.4 | 3.4 | 3.4 |
| $\text{Biogas}_{bio-waste}$ | NL | 465.9 | 462.0 | 464.5 | 478.5 | 459.3 | 533.1 | 485.6 | 484.7 | 466.9 |
| $\text{Biogas}_{bio-waste}$ | $\text{NL kg}_{\text{ODM}}^{-1}$ | 514.0 | 509.7 | 512.4 | 527.9 | 506.7 | 588.1 | 535.7 | 534.7 | 515.1 |
| Mean change | % | | — | | | + 5.6 | | | + 3.2 | |
| $\text{Methane}_{total}$ | NL | 260.7 | 257.8 | 258.3 | 264.4 | 256.0 | 295.7 | 269.4 | 270.7 | 259.9 |
| $\text{Methane}_{total}$ | $\text{NL kg}_{\text{ODM}}^{-1}$ | 246.7 | 243.9 | 244.4 | 250.2 | 242.3 | 279.8 | 254.9 | 256.1 | 245.9 |
| Mean change | % | | — | | | + 5.1 | | | + 3.0 | |

to the control (0.6 %). Nonetheless, the biogas yields of each reactor are quite similar. In addition, all reactors produced a biogas with a $CH_4$-content of around 54 %.

Based on the resembling yields of the reactors it can be concluded that the trial successfully simulated the biogas plant in Erfurt. This is substantiated by correlating biogas yields (based on fresh matter (FM) bio-waste) between the control triplicate with 116 $\text{NL kg}_{\text{FM}}^{-1}$ and the biogas plant with 85 $\text{NL kg}_{\text{FM}}^{-1}$ [SWE, 2016], where stones and branches are not removed from the bio-waste.

The triplicates with a biochar addition of 5 $\%_{\text{ODM}}$ respectively 10 $\%_{\text{ODM}}$ show a yield increase compared to the control of around 5 % respectively 3 %, both for biogas and methane. However, each triplicate has one reactor with very similar yields compared to the control. Therefore, the increased yields could also be attributed to the heterogeneity of the bio-waste. It can be concluded that the biochar did not inhibit the anaerobic digestion and possibly increased the gas yields marginally.

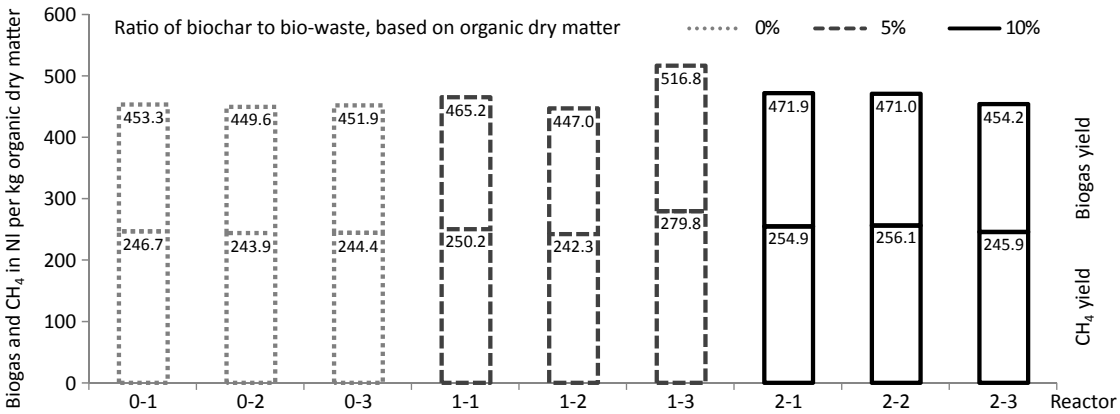


Figure 6.2: Biogas and methane ($CH_4$) yields for all reactors.

## 6.3 Discussion

As mentioned in the introduction, prior trials with biochar in anaerobic digestion have resulted in various methane yield changes. Table 6.2 provides an overview about these trials and their key parameters. The trials are sorted chronologically, beginning with Kumar *et al.* (1987), followed by Ithapanya *et al.* (2012) and the others, and concluded with the trial presented in this paper. Because the publications by Ithapanya *et al.* do not contain any information about dry matter contents, the ratios of biochar to substrate are consistently based on fresh matter, including all digestate and added water. Standard deviations for the $CH_4$ yield changes, or the necessary data to calculate them, are only published by Mumme *et al.* and are therefore not included in the table.

What strikes first in regard to the trials is the variety of substrates and biochars and their ratios. This variety is complemented by different trial conditions. Although this makes a comparative analysis nearly impossible, all these trials add important aspects to a bigger picture.

It starts with the question why it took 25 years after Kumar *et al.* to make new investigations on this topic. Ithapanya *et al.* answer this indirectly by asking if it could make sense to extract the biochar from the digestate to re-use it. The rationale behind this can have two reasons. First, biochar is a commodity with a price. Even if green waste for free could be used to produce the biochar, which would be the case at German bio-waste-to-biogas plants, the costs for the production [Dunst, 2013] would still put a price tag on it. Therefore, the increased methane yields would need to be high enough to compensate for the biochar price. With the favorable EEG feed-in tariff for electricity from bio-waste this might be achievable, but that was probably not the case in the economic framework of Kumar *et al.* and Ithapanya *et al.* Second, the cascade model for biochar mentioned by Rödger *et al.* was probably not considered yet. Recognizing also the possible benefits during the post-composting of the biochar-enhanced digestate, and later the benefits by the biochar-compost in the soil, could lead to a sum much higher than the cost of the biochar.

The substrate compositions of Kumar *et al.* and Ithapanya *et al.* probably reveal a major principle of biochar in anaerobic digestion. Cow slurry and cattle manure can be rich in nitrogen and this can lead to ammonia inhibition. While an adjusted biocenosis, e.g., in digestate, can handle high ammonia loads [Yenigün and Demirel, 2013; Rajagopal et al., 2013], these trials were done with fresh substrate and water only. It seems that the biochar helped to overcome these poor initial conditions.

The mechanisms behind this could be in providing favorable conditions for the biocenosis, either by acting as buffer for inhibitory substances, or by delivering micro-nutrients, or by creating habitats. Ithapanya *et al.* suspect the formation of bio-films, which could more easily overcome certain inhibitory effects. This point correlates with the higher number of microorganisms reported by Kumar *et al.* and Mumme *et al.* In regard to these two findings, it could be argued that the low temperatures during the second trial by Ithapanya *et al.* led to conditions where these mechanisms could not work, resulting in no significant yield change.

Table 6.2: Methane ($CH_4$) yield changes in prior and current investigations in regard to fresh matter (FM) ratios of biochar to substrate.

| **Source** | **Trial type, condition, duration** | **Substrate composition** | **Amount** $g_{FM}$ | **#** | **Origin of added biochar or hydrochar (HTC)** | **Rate** $\%_{FM}$ | **$CH_4$ yield %** |
|---|---|---|---|---|---|---|---|
| Kumar *et al.* 1987 | continuous flow [2] 35°C, 40 days | cow slurry (8% solids) | 5000 | 2 | charcoal powder | 0.40 | [1] + 34.7 |
| | batch, glas bottles 35°C, 40 days | | | 2 | | | [1] + 17.4 |
| Ithapanya *et al.* 2012 | batch, glass bottles 35°C, 30 days | cattle manure water | 283 905 | 4 4 | rice husks (900-1000°C) | 0.05 0.15 | + 28.9 + 30.8 |
| Ithapanya *et al.* 2013 | continuous flow [2] 25-30°C, 20 days | cattle manure water | 3000 9000 | 4 | rice husks (900-1000°C) | 0.05 | - 0.9 |
| Rödger *et al.* 2013 | batch, HDPE barrels 37°C, 40 days [3] | corn silage digestate | 366 20 000 | 3 | woodchips (550°C) | 2.46 | + 21.7 |
| Mumme *et al.* 2014 | batch, glass syringes 42°C, 63 days | digestate | 30 | 3 | paper sludge+wheat (550°C) | 6.67 | - 8.5 |
| | | | | 3 | straw digestate (HTC 230°C) | | + 31.7 |
| Velghe OWS 2015 | batch, glas reactors 52°C, 14 days | cauliflower [4] digestate | 100 1000 | 2 | holm oak residues (650°C) | 0.18 | + 1.1 |
| | | leek [4] digestate | 100 1000 | 2 | | | + 0.1 |
| by the authors | batch, steel reactors 40°C, 30 days | bio-waste digest.+percol. | 4000 4000 | 3 3 | holm oak residues (650°C) | 0.83 1.65 | + 5.1 + 3.0 |

Notes: [1] refers to biogas yield only; [2] number of days equals the retention time, not the trial duration; [3] trials were continued till day 91, which reduced the $CH_4$ yield to + 8.9%; [4] mixed with corn stover; # number of replicates; $_{FM}$ fresh matter.

The hydrochar, produced by hydrothermal carbonization (HTC), in the trial by Mumme *et al.* led to a higher yield because of its high labile carbon content, which was digested. Why the biochar decreased the yield by 8.5 % is not clear. However, this trial stands out with its very low amount of substrate and a very high ratio of biochar. While it is important to recognize this negative result, its relevance for the whole picture should not be overrated. In addition, this yield change falls within the standard deviation of the control and is therefore inconclusive.

The marginal — and likewise inconclusive — yield raises in the trials by Velghe and by the authors could be the result of a nearly optimal process. Both trials used digestate from industrial bio-waste-to-biogas plants, which provided an ideal biocenosis from the start. In addition, the solid-state fermentation by the authors provided enough stable surfaces for bio-films. In sum, it may simply be that there were no inhibitory effects that could be mitigated by biochar.

In conclusion, the mechanisms that are responsible for higher methane yields through biochar addition are not fully understood. However, it was shown that biochar can be a useful additive to optimize biogas production in certain conditions. Based on a cascade approach this could yield numerous benefits. Further investigations in this direction, especially in regards to alleviating suboptimal process conditions, seem promising.

## 6.4 Materials and Methods

The trial is a mesophilic (40 °C) solid-state (batch) fermentation with percolation, which simulates an existing large-scale biogas operation, a BEKON facility established in Erfurt, Germany in 2008. This facility has an annual capacity of 18 200 Mg bio-waste and converts the 1 547 000 $m^3$ biogas into 3 993 900 kWh electricity [SWE, 2016].

### 6.4.1 Trial Setup

The trial setup outlined in Figures 6.3 and 6.4 includes eleven reactors. They are made of steel, with a plastic bottom and cover plate. Each has an internal volume of 18 L. The substrate in the reactor is held in place by two perforated steel plates with 5 mm holes. The percolate fluid dashes against the top plate and spreads all over it, allowing a complete distribution over the full area. At the bottom, the perforated plate prevents the escape of larger particles, which could block the hose connectors.

Two of the eleven reactors are only used for the gas potential test of the digestate. The remaining nine reactors are connected to percolation tanks as illustrated in Figure 6.4. The percolate hoses are made of polyamide and have an outside diameter of 12 mm. In order to avoid gas pressure buildups from the speed difference between percolate pump and the percolation within the substrate, pressure compensation hoses connect the percolate tanks with top and bottom of the reactors. These hoses are made of polyamide as well and have an outside diameter of 8 mm. The percolate pumps (Elegant-Inline by Comet) have a delivery head of 5.5 m and are installed at the very bottom of the percolate circulation to avoid dry running. All pumps are activated by a central, programmable control relay.

With a constant temperature of 40 °C the biogas leaves the climate chamber via the gas hoses (polyamide, 8 mm). At a room temperature between 20 °C to 25 °C emerging condensate is collected in the condensate traps. They are simple end fittings which can shortly be opened to release the condensate from time to time. The biogas then passes magnet valves, which are closed by the control relay when the percolate pumps are active and then for one more minute. This eliminates any possible back flow from the gas bags during percolation, although the pressure compensation hoses in the climate chamber reduce this possibility already.

The used gas meters (TG05/5 by Dr.-Ing. RITTER Apparatebau GmbH & Co. KG) can only withstand an excess pressure of 50 mbar. In case the 20 L gas bags (by RITTER as well) are not exchanged in time before they are full, the meters could be damaged. Therefore, a fermentation lock is installed in front of each meter. The glass locks are standard wine making equipment, although they are filled with sealing liquid (Silox by RITTER) to prevent gas diffusion during normal operation. In case of an overfull gas bag, the lock releases biogas before the excess pressure reaches critical levels.

For the gas quality a gas analyzer (by Awite) is used, which is frequently calibrated. The analyzer provides measurements of methane, carbon dioxide, and oxygen in percentage. For each measurement, the gas bags have to be disconnected from the trial installation and connected to the analyzer. At the end of the analysis the remaining gas in the bags gets exhausted by an electric pump and the empty bags get reconnected to the installation.

(a) (b) (c)

Figure 6.3: Test setup with (**a**) gas meters and gas storage bags in front of the climate chamber; (**b**) reactors and percolation tanks in the climate chamber; (**c**) components of a single reactor.

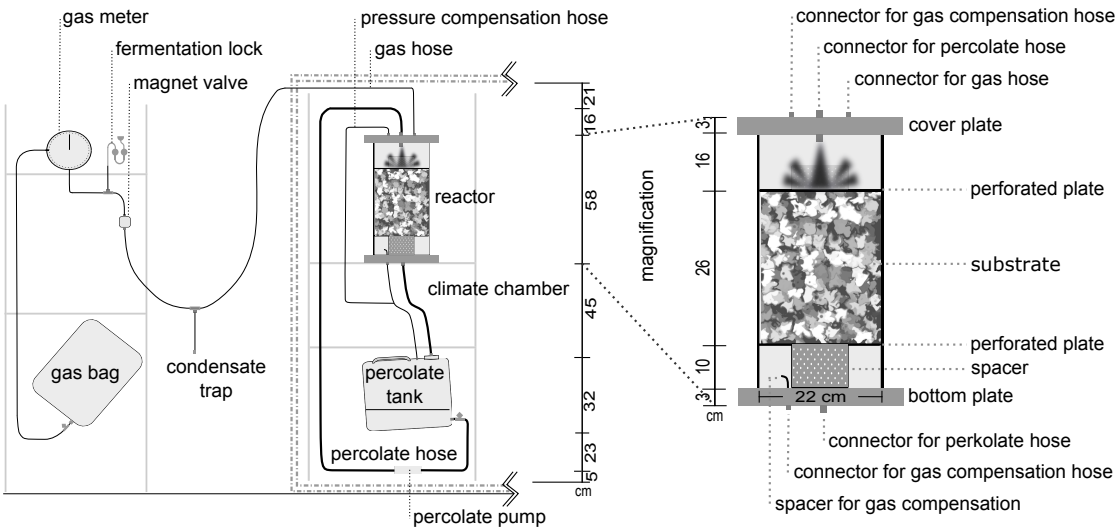


Figure 6.4: Scheme of the test setup for one reactor including gas collection and metering.

### 6.4.2 Trial Substrates

To simulate the operations of the industrial biogas plant, original substrate from it was used in the trials. This includes bio-waste (OFMSW) as main substrate, digestate as inoculum, and percolate for the percolation.

The used biochar was produced from a clean forestry wood residue (Holm Oak) at 650 °C using a commercial mono retort reactor (by Proininso S.A.). It is the reference biochar of the FP7 Fertiplus project (2011–2015), which has also been used in field trials and composting experiments. Table 6.3 provides the results of the analysis, done by the University of Leeds. It has to be stressed that the analysed parameters can vary from batch to batch. For example, Table 6.4 (Reactor contents) reveals that the organic dry matter of the batch used in this trial is 8.7 percentage points lower than of the batch analysed in Table 6.3.

The analysis of the biochar was done following the recommended analytical methodologies by the International Biochar Initiative (IBI). To set the values in context, the respective thresholds for the voluntary European Biochar Certificate (EBC) are added as well. All physical and chemical parameters of the biochar are well within the limits of both EBC quality levels, basic and premium.

Table 6.3: Biochar properties [Ross, 2015] and thresholds of the European Biochar Certificate [EBC].

| Parameter | Unit | Biochar | EBC basic | EBC premium | Parameter | Unit | Biochar | EBC basic | EBC premium |
|---|---|---|---|---|---|---|---|---|---|
| Ultimate analysis (on dry ash-free basis) | | | | | Micro-nutrients | | | | |
| C | % | 76.5 | > 50 | > 50 | Mn | mg/kg | 426 | | |
| H | % | 1.4 | | | Fe | mg/kg | 415 | | |
| O | % | 7.0 | | | Zn | mg/kg | 56 | < 400 | < 400 |
| N | % | 0.8 | | | B | mg/kg | 32 | | |
| S | % | 0.0 | | | Cu | mg/kg | 11 | < 100 | < 100 |
| H/C | - | 0.2 | < 0.7 | < 0.7 | Mo | mg/kg | < 0.5 | | |
| O/C | - | 0.1 | < 0.4 | < 0.4 | Potentially toxic heavy metals | | | | |
| Proximate analysis | | | | | Al | mg/kg | 540 | | |
| Moisture content | % | 15.2 | | | V | mg/kg | 44 | | |
| Ash content | % | 14.3 | | | Tl | mg/kg | 12 | | |
| Organic dry matter | % | 85.7 | | | Ni | mg/kg | 11 | < 50 | < 30 |
| Volatile matter | % | 11.8 | | | Ti | mg/kg | 8 | | |
| pH | - | 10.3 | | | Cr | mg/kg | 5 | < 90 | < 80 |
| Macro-nutrients | | | | | Pb | mg/kg | 2 | < 150 | < 120 |
| P | % | 0.2 | | | Cd | mg/kg | < 0.5 | < 1.5 | < 1 |
| K | % | 0.6 | | | Sb | mg/kg | < 0.1 | | |
| Ca | % | 5.0 | | | Be | mg/kg | < 0.1 | | |
| Mg | % | 0.3 | | | Sum of 16 Polycyclic Aromatic Hydrocarbons | | | | |
| Na | % | 0.0 | | | PAH | mg/kg | 0.24 | < 12 | < 4 |

The substrate amounts per reactor are specified in Table 6.4, including the added amounts of biochar. The three controls are without biochar, while three other reactors receive 66 g, which is around 5 % of the bio-waste, based on organic dry matter. Another three reactors receive the double amount, resulting in a 10 % ratio. The ratio of bio-waste to digestate, 4 to 1 based on fresh matter, corresponds to the industrial operation.

The amount of the percolate was chosen to allow a full percolation cycle (1 L) without draining the percolate tank. Since all triplicates received the identical amount of substrates, this allows a direct comparison on the effect of biochar on the biogas yield.

Table 6.4: Substrate contents for one reactor.

| Parameter | Unit | Bio-Waste | Digestate | Percolate | Biochar |
|---|---|---|---|---|---|
| Fresh matter | g | 4000.0 | 1000.0 | 3000.0 | 0 / 66.0 / 132.0 |
| Dry matter | g | 1432.0 | 296.0 | 60.0 | 0 / 60.7 / 121.3 |
| Organic dry matter | g | 906.5 | 126.1 | 24.3 | 0 / 46.7 / 93.4 |
| Dry matter (DM) | % | 35.8 | 29.6 | 2.0 | 91.9 |
| Organic dry matter | $\%_{DM}$ | 63.3 | 42.6 | 40.5 | 77.0 |

The dry matter contents in Table 6.4 were determined according to DIN EN 14346. For each substrate two samples were analyzed, except for the bio-waste for which four samples were analyzed because of its high heterogeneity. The organic dry matter, respectively the volatile solids were determined according to DIN EN 15169. From each dry matter sample two samples were analyzed. The percentage values in the table are averages from these analyses.

### 6.4.3 Trial Execution

Before the actual trial a pre-trial was undertaken to identify weak spots of the setup. Because of several interruptions during this pre-trial the recorded data was not used for this paper, even though similar yield increases with biochar could be observed.

Some minor problems with leaking reactors, tanks and hose connectors were quickly identified and solved. A greater challenge posed the percolation cycle. It was planned to use nozzles which spray the percolate evenly onto the substrate. However, they were all clogged with solids after one or two days. This led to the solution with the perforated steel plate, were the percolate dashes against. The necessary operation time (30 s) for one percolation cycle (1 L) was determined by testing the throughput per time. Since all pumps have the same discharge and are connected by the same length of hoses, their operation time is identical. The percolation regime is based on the industrial operation, though not identical. It starts with 19 percolation cycles on day one, is reduced to 12 per day on day two and three, then further reduced to 6 per day on day four and five, and finally continues with 3 cycles from day six until the last day of the trial.

Another major problem identified in the pre-trial was the clogging of the pumps. This happened frequently when percolation cycles were reduced to three times a day. While with a longer operation time each pump could be unclogged, this clearly threatened the accuracy of the percolation regime. The problem was solved by adding a short pump interval (1 s) to each full hour and two intervals before a percolation. This is short enough to prevent any percolate to enter the reactors, but long enough to prevent any sedimentation of solids, which was the likely source of the clogging.

The actual trial is done with three simultaneous triplicates (3 × 3 reactors), one

triplicate as the control and the others with two different supplement ratios of biochar. The amount of the reactor contents was already provided in Table 6.4. Parallel to the trial, two additional reactors without percolation are filled with 5 kg digestate to determine its biogas potential. The potential of the percolate is determined with two 800 g samples in glass bottles. They are shaken once a day and the gas production is recorded daily for the full duration of the trial. Because much less gas is produced than in the reactors, smaller gas meters are used (MGC-1 PMMA by RITTER).

The trial begins with the preparation of the substrates. Except for the biochar which was in storage for some weeks, all other substrates are transported from the industrial biogas plant to the laboratory a few days earlier. Digestate and percolate are stored at 40 °C to keep the biocenosis intact. The bio-waste is stored at 4 °C to reduce decomposition. Prior to mixing the substrates, the digestate is slowly stirred to homogenize it. This is also done for the percolate before pouring it into the reactors. The bio-waste is only cleared of rocks, branches, and larger plastic parts, but not shredded. This is done to simulate the industrial conditions, but it also reduces the chances of clogging in the reactor during percolation. Clogging occurred once in the pre-trial, which was quickly identified because the percolate tank was drained. A short but intense shake unclogged the reactor.

Bio-waste, digestate, and biochar are mixed together manually and then put into the reactors. The perforated steel plate is based on top of the substrate. Then the percolate is slowly poured onto the plate, initiating the first percolation cycle. The cover plate of the reactor is then added and screwed tight. When all hoses are connected to the cover plate the reactor system is in operation. Like in the industrial biogas plant, the batch process starts in ambient air and changes slowly to a carbon dioxide-methane atmosphere.

The following 30 days include mainly gas analyses, data recording, and frequent controls of the percolation cycles. The trial is terminated at day 31, although only data until day 30 is analyzed. The termination criterion according to VDI 4630, daily gas production of less than 1 % of the accumulated amount, was already fulfilled then. The removal of the substrates from the reactors shows that all contents are completely wet and there are no dry zones. While this does not reveal much about the quality of the percolation, it confirms that all substrates could take part in the anaerobic digestion.

## Acknowledgments

This study was undertaken within the project FERTIPLUS (Grant Agreement No. 289853), which is co-funded by the European Commission, Directorate General for Research & Innovation, within the 7th Framework Programme of RTD, Theme 2 – Biotechnologies, Agriculture & Food. The views and opinions expressed in this paper are purely those of the authors and may not in any circumstances be regarded as stating an official position of the European Commission.

The authors thank the public utility company Bioverwertung & Recycling GmbH for the provision of bio-waste, percolate, and digestate and for the insight into their operations.

# 7 Impacts and Viability of Biochar in a Bio-Waste Cascade

To evaluate the impacts and the viability of the proposed biochar-enhanced cascade, the results of the previous chapters are combined with further aspects in the following sections. This whole picture provides the base for the material and energy-flow analysis (MEFA) at the end of this chapter and the concluding assessment of the cascade.

## 7.1 Ecological Impacts

The ecological impacts of biochar in the bio-waste cascade were hardly covered in the previous chapters. In the following, the impacts are outlined with regard to three aspects: carbon, nutrients, and pollutants.

### 7.1.1 Carbon

Beside ash, carbon is the main constituent of biochar. Obersteiner et al. [2015] investigated the environmental impacts of biochar production with a material flow assessment (MFA). The investigated production unit [Pyreg, 2016] is installed at the Austrian company Sonnenerde [Dunst, 2013, 2015]. According to the authors, around 50 % of the carbon in the input material remains in the produced biochar. The other half is emitted with the combusted pyrolysis gas, together with most of the oxygen and hydrogen.

Dunst [2015, p 205] found from several large-scale trials a linear relation between the rate of biochar addition and carbon loss ($CO_2$-emissions) during composting. The remaining organic carbon from the input (biochar excluded) of the compost rises from around 50 % with no biochar up to 80 % with a biochar addition of $50\,\%_{\mathrm{FM}}$. This linear relation is transformed into the Equation (7.1).

$$\mathrm{C_{org}} = 50 + 60 \cdot \mathrm{C_{biochar}} \tag{7.1}$$

where

$C_{org}$ = the remaining organic carbon from the input (biochar excluded) in % after eight weeks of rotting

$C_{biochar}$ = the amount of added biochar prior to composting in $\mathrm{kg\,kg^{-1}}$, for a range between 0 to 0.5

Because there are no reported composting trials with AD-treated biochar, it will be assumed that biochar leaving the AD unit in the proposed cascade has the same effect on

composting as the biochar in Equation (7.1). Therefore, this equation will be used in the calculation of the gaseous carbon emissions in the subsequent MEFA in Section 7.4.

### 7.1.2 Nutrients

The amount of nutrients in biochar depend on the feedstock and on the pyrolysis process. However, the main role of biochar is not to deliver nutrients but to be an intermediary for them. With this role, biochar can improve the efficiency of applied nutrients. This would be a necessity for a sustainable, closed-loop agriculture.

Table 7.1 provides an overview of the macro-nutrients nitrogen, phosphor, and potassium (NPK) potentially available for agriculture in comparison to the current consumption of mineral fertilizer in agriculture. Not considering that most of the biogenic nutrients are currently wasted, it becomes very clear that the efficiency of the applied mineral fertilizers cannot be very high.

Table 7.1: Annual biogenic NPK flow per capita compared to the mineral fertilizer use in the EU [Meyer-Kohlstock and Kraft, 2014].

| **Nutrient** | **Unit** | **Bio-Waste** | + | **Feces** | + | **Urine** | + | **Gray Water** | = | **Biogenic Sum** | ***vs.*** | **Mineral Fertilizer** |
|---|---|---|---|---|---|---|---|---|---|---|---|---|
| N | $\mathrm{kg\,cap^{-1}\,a^{-1}}$ | 0.878 | | 0.548 | | 3.796 | | 0.365 | | 5.586 | | 19.528 |
| P | $\mathrm{kg\,cap^{-1}\,a^{-1}}$ | 0.176 | | 0.183 | | 0.365 | | 0.183 | | 0.906 | | 1.601 |
| K | $\mathrm{kg\,cap^{-1}\,a^{-1}}$ | 0.527 | | 0.256 | | 0.913 | | 0.365 | | 2.060 | | 3.371 |

Chan et al. [2007] demonstrated that biochar can improve the efficiency of mineral NPK-fertilizer. They investigated specifically the agronomical effect of green-waste biochar in connection with N fertilizer. In their pot trials with radishes in a typical agricultural soil of New South Wales (an Alfisol), they combined three biochar rates (10, 50 and $100\,\mathrm{Mg\,ha^{-1}}$) with and without a nitrogen application of $100\,\mathrm{kg\,ha^{-1}}$. In the absence of additional nitrogen, the dry matter yields of radishes were not affected by the biochar application. However, with nitrogen the yield rose from a 95 % increase without biochar to a 266 % increase with the highest biochar application.

The already cited investigation by Obersteiner et al. [2015] considered also the fate of two nutrients from the input material: nitrogen (N) and sulfur (S). During pyrolysis, most N and S compounds are thermally degraded into pyrolysis gas, which will also be considered in this work MEFA. The combustion of the gas with a flameless oxidation (FLOX) at 1 100 °C to 1 400 °C prevents the thermal formation of nitrogen oxide ($NO_x$) to a large extent. Therefore, most of the nitrogen from the input material is emitted as common atmospheric nitrogen ($N_2$). Since the investigated unit has no flue gas desulfurization, there are some sulfur dioxide ($SO_2$) emissions. However, they do not exceed the legal thresholds.

Phosphorus (P) is less volatile than N and S. Therefore, it can be assumed that a considerate percentage of the original P remains in the biochar. Nonetheless, biochar from woody material has generally low nutrient contents based on the respective amounts in the feedstock.

### 7.1.3 Pollutants

Biochar may contain pollutants originating from feedstock or formed during pyrolysis. While the latter can be influenced to a large extent, the pollutants in the feedstock, most importantly heavy metals, will simply concentrate in the final biochar [Hilber et al., 2012]. Since this would happen with the green waste during composting as well, it does not differ from the current bio-waste cascade and is therefore excluded from the MEFA.

In contrast to composting, pyrolysis can generate high amounts of polycyclic aromatic hydrocarbons (PAH). These are organic compounds that consist only of hydrogen and carbon in the form of cyclic planar molecules, *i.e.*, aromatic rings. These rings provide a high stability, reducing the likelihood of breaking down or reacting with other substances. However, many PAHs are carcinogenic because they can be metabolized to epoxides that react with DNA. PAHs can be created during all incomplete combustion processes involving organic material and can be found in fossil oil and coal but also in cigarette smoke and in food cooked at high temperatures (grilling, roasting, frying) [Phillips, 1999; EC, 2002]. Because of this abundance in combination with their persistence, 16 of the most toxic PAH compounds are today regulated in many countries. If not further specified, the regulatory threshold levels refer to the total amount of all 16 PAHs combined.

Since the final destination of biochar in this cascade is the soil, it is very relevant what happens there with the PAH. Kuśmierz et al. [2016] studied in a 30-month field trial the fate of PAH from biochar in an acidic soil (loamy sand). Three experimental plots, each $15\,\mathrm{m}^2$, were treated with $3\,\mathrm{kg\,m^{-2}}$ biochar, $4.5\,\mathrm{kg\,m^{-2}}$ biochar, and without biochar (control plot). The biochar additions raised the PAH content from $0.239\,\mathrm{mg\,kg^{-1}}$ in the control soil to $0.526\,\mathrm{mg\,kg^{-1}}$ and $1.310\,\mathrm{mg\,kg^{-1}}$ for the 3 kg and 4.5 kg treatments. However, over the trial the duration of the PAH contents decreased to a value characteristic of the unamended soil. While there could also be observed a migration of PAHs from the 0–10 cm to the 10–20 cm soil horizon, the reduction of the PAH levels was based on degradation, which was highest in the first 105 days of the trial.

Another important aspect of PAH in biochar is its availability within the soil for plants, for fungi, and for micro- and macro-organisms. Mayer et al. [2016] investigated current methods for determining this exposure level. They assessed five methods on two biochars with relatively high PAH concentrations of $63\,\mathrm{mg\,kg^{-1}}$ and $355\,\mathrm{mg\,kg^{-1}}$, respectively. The threshold value of the European Biochar Certificate is $12\,\mathrm{mg\,kg^{-1}}$ [EBC 6.2E]. They found that none of the methods is suitable for a direct measurement of the readily desorbing fractions of PAHs in biochar, *i.e.*, their bioaccessibility. However, the measurements of freely dissolved PAH concentrations were below or near environmental background levels and the measurements of desorption-resistant PAH fractions implied a bioaccessibility in the high $\mu\mathrm{g\,kg^{-1}}$ to low $\mathrm{mg\,kg^{-1}}$ range. This coincides with their findings that biochars often act as sinks rather than as sources of PAHs. Interestingly, similar results were found for heavy metals as well [Moreno-Jiménez et al., 2016].

Based on these findings, that PAHs from biochars can be degraded in soils and that they mostly stick to the biochars, these compounds are excluded from the MEFA. Nonetheless, the formation of these compounds should be minimized to reduce potential risks during the handling of biochar, as reflected by the EBC 6.2E thresholds.

## 7.2 Legal Framework

Previous chapters provided specific information about the legal aspects of composting and anaerobic digestion of bio-waste in Germany and in the EU. Yet, the production and application of biochar from green waste require further investigation.

### 7.2.1 Production of Biochar from Green Waste

Since it is not intended to produce any bio-oil within this cascade, the conversion of green waste shall result only in biochar and gaseous emissions (pyrolysis gas). The latter will be completely combusted to drive the process and to recover thermal energy for drying the green waste.

The construction and operation of a pyrolysis unit requires adherence to several environmental and safety regulations. Since there are several pyrolysis units installed in Germany that abide by these regulations [Pyreg, 2016] and because the first unit that runs on organic waste was approved by Austrian authorities already in 2012 [Dunst, 2013], it is assumed that this aspect is no major obstacle for the integration of biochar into the proposed cascade.

In contrast, the production of biochar as such might be threatened by an EU regulation that, at first glance, seems not related to the issue. The European regulation concerning the registration, evaluation, authorization, and restriction of chemicals (REACH) [2006R1907] is intended to ensure a high level of protection for human health and the environment while also supporting the free movement of substances within the EU internal market. Based on this regulation, the European Chemicals Agency (ECHA) was established to help companies comply with the legislation, advance the safe use of chemicals, and provide information on chemicals.

According to §6 (1) of REACH, any producer or importer of chemicals in quantities of one metric ton or more per year shall submit a registration to the ECHA. In February 2016 a total of 199 companies were registered for the production or import of charcoal in the EU [ECHA, 2016a]. Another 13 companies were registered for making charcoal from coconut shells [ECHA, 2016b].

Biochar is not registered under REACH yet. While many biochars could simply be declared as charcoal — under REACH it is also listed for the use as fertilizer — it could be argued that other biochars from different plant materials would deserve a new registration. However, according to Hopkins [2016], a biochar producer in the UK, this could mean the end of many small-scale producers. He states that the first registration of charcoal costs two million euros alone and that these costs can be redeemed from all producers that have to register as well, starting from 2018. This would mean at least 1 000 € per year for each charcoal producer in the UK. Therefore, he fights for the exemption of biochar from REACH registration and refers, among other things, to Annex V, which exempts "substances which occur in nature" and "substances obtained from natural sources, if they are not chemically modified" from registration as long as they are not dangerous, persistent, bio-accumulative, or toxic. While this could also be said about charcoal, the UK ECHA has allowed an exemption for his biochar production so far.

However, this development should play no role for the investigated bio-waste cascade. According to §2 (2), any waste defined by the Waste Framework Directive [2008/98/EC] does not fall under the REACH regulation. Green waste is defined in the list of waste under number 20 02 01 as "biodegradable garden and park waste." After pyrolysis, it could probably be classified as "not otherwise specified waste from incineration or pyrolysis of waste" (19 01 99). Therefore it is highly unlikely that the biochar production within the cascade would fall under REACH regulation. Biogas and compost are specifically exempted from registration by Annex V.

### 7.2.2 Biochar in Anaerobic Digestion of Bio-Waste

The most relevant regulation for the production of biogas from bio-waste is the Renewable Energy Act (EEG), since it is the foundation of its financial viability. According to §43 [EEG, 2016], the act grants the guaranteed feed-in tariff for the produced electricity only if specific conditions are met. One of them is the requirement to further compost the resulting digestate. Another is the requirement that 90 % of the annual fermentation substrate has to be bio-waste, based on the definition by Annex 1 No. 1 of the BioAbfV (comparable with the WFD definition). Therefore, the maximum average biochar addition to bio-waste fermentation is currently 10 %.

It could be argued that biochar is not fermentation substrate since it is not digested. However, it is unlikely to be accepted as a simple process amendment when more than 10 % is regularly applied. Another argument could be that the biochar still has the legal status of bio-waste since it is produced from it. Although this line of argument was helpful in the REACH case, the current EEG does not foresee such an interpretation. Nonetheless, a maximum addition of 10 % biochar provides enough room to implement the proposed cascade.

### 7.2.3 Application of Biochar Compost to Soil

The legal application of biochar-enhanced bio-waste compost to soils in Germany depends mainly on two ordinances: the Bio-Waste and the Fertilizer Ordinance.

#### Bio-Waste Ordinance

The German Bio-Waste Ordinance [BioAbfV] regulates treated and untreated bio-waste or mixtures that will be used as fertilizer in agri-, horti,- or silviculture. It covers disposal providers and treatment facilities, as well as farmers, gardeners, and foresters, but excludes home and allotment gardens as well as the use of farm bio-waste on land belonging to the same farm.

According to §6 (1) of the BioAbfV, the maximum amount of compost to be applied to soil is $30\,\mathrm{Mg\,ha^{-1}}$ within three years. This equals an annual maximum average of $1\,\mathrm{kg\,m^{-2}}$, which is the rate used to calculate the full EU potential for biochar compost in Chapter 5. Based on this best-case scenario and on the maximum application rate, there would only be enough biochar compost to treat 3.7 % of all arable land in the EU.

The three tables of Annex 1 of the BioAbfV list various types of organic waste suitable for application on land. All organic waste types defined by the EU Directive 2008/98/EC as bio-waste, and some others, are included in Table 1a. The waste types of Table 1b, which represent mostly slurry from specific processes, require an additional approval from the appropriate authority if more than $2\,\mathrm{Mg\,a^{-1}}$ are produced. Finally, Table 2 lists other organic waste and mineral substances that are suitable to be co-treated with bio-waste or to be used for the production of mixtures.

One group of substances within Table 2 is organic waste from combustion or pyrolysis. However, it is specified that this includes only the ash of these thermal processes. Biochar as such is not covered by this regulation. Yet, it is also stated in Table 2 that any fertilizer or soil additive allowed by the German Fertilizer Ordinance could be defined as suitable other waste for land application. Therefore, if pyrolyzed green waste would be included there, an amendment of the BioAbfV would not be necessary.

### Fertilizer Ordinance

The German Fertilizer Ordinance [DüMV] regulates the placing of fertilizers on the market that are not already registered as EC fertilizers under the EU Regulation EC 2003/2003. In addition, it also regulates the placing of soil additives, cultural substances, and plant additives on the German market.

In Annex 2, Table 7.4 of the DüMV, bio-waste is listed as an allowed main component for fertilizer. This is the legal base in the DüMV for applying bio-waste compost in agriculture. Biochar from green waste does not conform with any fertilizer type or soil additive listed by this regulation and can therefore not be used for soil application.

However, according to Table 7.1, common charcoal can be used as:

- raw material for growing media, and as
- a carrier substance for DüMV-registered fertilizer,

if the charcoal is made from chemically untreated wood and if it has at least a carbon content of $80\,\%_{\mathrm{DM}}$. Technically, it would be possible that biochar from green waste complies with these terms. However, since the pyrolyzed green waste is legally not a product (charcoal) but a treated waste, this regulation would not apply to the cascade.

While it could be possible to produce charcoal from green waste, this would involve at least the legal transformation of waste to a product and the compliance with REACH (see Section 7.2.1 on page 75). Therefore, it seems easier to extend Table 7.1 of the DüMV to pyrolyzed natural plant material, possibly with a lower carbon threshold to compensate for higher ash contents in green waste. Alternatively, pyrolyzed green waste could also be implemented into Table 8 regarding secondary components, since biochar would not be the main component of the final compost within this cascade.

The proposed cascade cannot be realized under the current soil-related regulations. However, the necessary amendments to these regulations can be regarded as minor.

## 7.3 Financial Viability

The viability of the cascade depends largely on its financial costs and benefits. Prior to the investigation of the benefits through biochar, the costs of all cascade steps are considered in the following.

### 7.3.1 Costs of Biochar and Bio-Waste Recycling

The production of biochar can be a costly endeavor. Although the intention is to use green waste as feedstock for biochar, whether it would be more viable to buy the required biochar on the market is examined first.

#### Biochar Market

An overview of the production capacities for charcoal, including biochar, in EU member states is presented in Figure 7.1 on the next page. Compared with the consumption — production plus import minus export — these capacities are very low. From this fact can be concluded that imports are cheaper than production within the EU. There are various reasons that could explain this. However, given that the wood resources in the EU would allow a larger production (see Table 5.2 on page 51), it is unlikely an issue of the feedstock. Also, charcoal making is an established and widely available technology, which rules out any innovation issue. This leaves only the costs regarding labor and environmental regulations. Therefore, cheap charcoal from outside the EU is likely associated with low wages and environmental burdens elsewhere.

Figure 7.1 visualizes also the import amounts per trade partner for Germany, which is the largest charcoal consumer in the EU. Because of trade chains between several partners, the origin of the charcoal is not verifiable from the trade statistics. Furthermore, in some cases the statistics themselves seem contradictory. Based on the statistical time series, Lithuania grew within four years from a country with negligible charcoal trade to the fourth biggest charcoal seller to Germany in 2012. Yet, the country has hardly any production capacity. It has to be assumed that, although no imports are reported, charcoal is bought from neighboring countries and then resold to Germany.

The annual charcoal consumption of Germany alone equals the full production capacity of the EU, around 240 000 Mg. Therefore, charcoal from overseas is required as well to satisfy the demand in the EU. For example, two of the three biggest charcoal exporters to Germany are Paraguay and Nigeria. However, it is noteworthy that both countries have a decreasing bio-capacity, *i.e.*, a decreasing ability of their ecosystems to produce useful biological materials [Global Footprint Network, 2016], which may include the feedstock for charcoal. Therefore, it seems undesirable to buy large amounts of charcoal from these countries to improve our bio-waste recycling, respectively our soils. It is even less desirable to accommodate our demand for its current main use, which is charcoal for barbecue parties [Destatis, 2013].

As mentioned in Chapter 1, several companies in Europe produce biochar and other organic blends with it. These companies have to abide to similar environmental standards

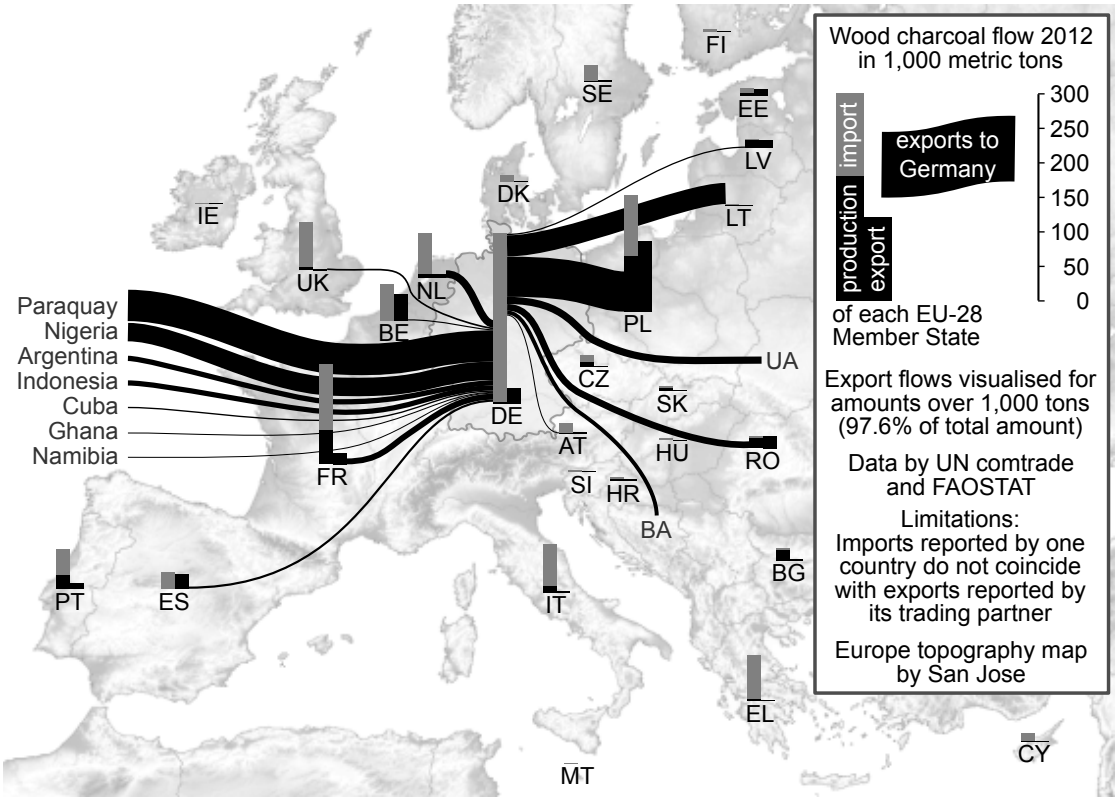


Figure 7.1: Charcoal production, import and export of EU member states, as well as Germany's charcoal import flows [Meyer-Kohlstock, 2013]. 4.0

as bio-waste treatment plants and they also have to pay similar wages. If they do not utilize organic waste themselves and they have to pay for their feedstock, then the resulting biochar price would likely be higher than the production costs at a bio-waste treatment plant. Nonetheless, economics of scale could result in low-cost biochar from a large-scale biochar company. If such a company were near to a bio-waste treatment plant, then it could make financial sense to buy the necessary biochar from this company. For most other cases, taking into consideration the free-of-charge feedstock and the existing framework of technology and labor force, the in-house production of biochar should be the aim.

### Biochar Production Costs

An overview of investment and production costs for several biochar production plants is provided in Figure 7.2 on the next page. The worldwide compilation is based on realized plants, as well as on planned scenarios. If the costs were in US dollars, they were converted 1:1 into euros. All costs were originally provided on a biochar basis. For the financial analysis of the cascade, the values were converted into costs per feedstock.

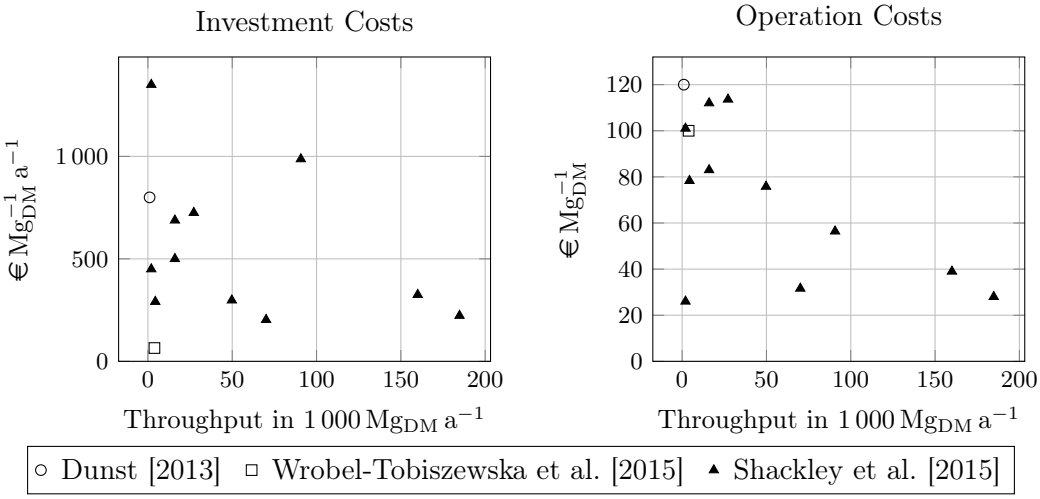


Figure 7.2: Investment and operation costs of biochar production plants, based on dry-matter feedstock, compiled from three publications.

Most data points were compiled by Shackley et al. [2015, pp 827–828]. A scenario for a mobile pyrolysis unit, based in Australia, was provided by Wrobel-Tobiszewska et al. [2015]. The most relevant source is the publication by Dunst [2013], since it describes a realized pyrolysis unit for organic waste in Austria. The costs with regard to labor, infrastructure, and environmental regulations should be comparable to Germany. Therefore, the operation costs for biochar production within the MEFA in Section 7.4 are set at 100 € $Mg_{FM}^{-1}$ input material. Regarding the difference between fresh matter (FM) and dry matter (DM), the value is set slightly higher than for the Austrian unit, which should account for unforeseen costs.

### Costs of Composting

The costs of bio-waste composting in Germany are well-known. Kranert et al. [2010] collated data specific to different plant sizes. The results are visualized in Figure 7.3 on the following page together with the results from Chapter 4 regarding the revenues from gate fees and compost sales. It is clear that these direct revenues cannot provide for the continued operation of the composting plants and that the remaining difference has to come from household waste fees. In addition, the data basis by Kranert et al. [2010] is quite extensive and the investigation in Chapter 4 might not have covered plants with higher revenues.

Nonetheless, some of the investigated 14 plants with open operations and relatively small throughput seem to be less dependent on general waste fees. In such an environment, increased sales prices through higher compost qualities could be a substantial incentive for improvements.

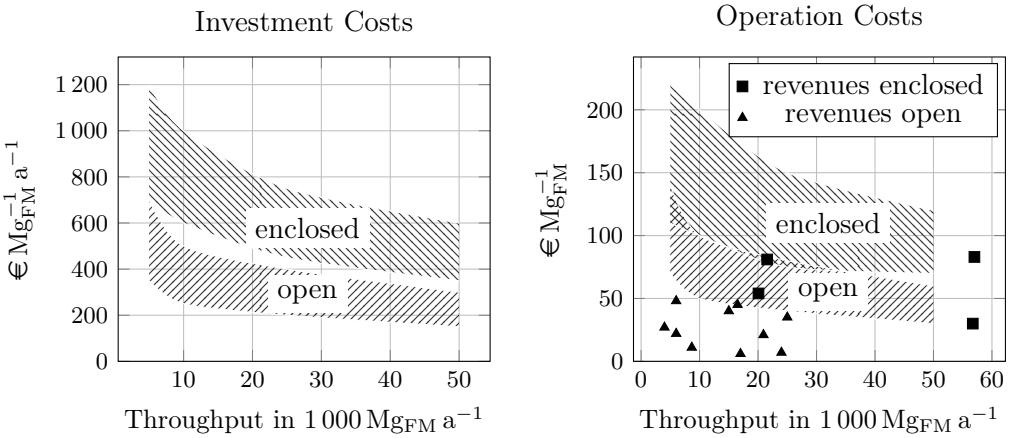


Figure 7.3: Range of specific investment and operation costs of bio-waste composting plants, in comparison to investigated total revenues from gate fees and compost sales for 14 composting plants (based on data by Kranert et al. [2010, p 231] and results from Chapter 4).

### Costs of Anaerobic Digestion

An overview of the investment and operation costs of ten agricultural biogas plants is provided in Figure 7.4 on the next page. In contrast to these numbers, Kranert et al. [2010, p 257] report far higher investment costs for bio-waste-to-biogas plants ranging from 200 to 700 € Mg$^{-1}$ a$^{-1}$, based on differing legal requirements, substrate qualities, throughput, and the chosen technology. For operation costs they report ranges from 40 to 200 € Mg$^{-1}$.

Balussou et al. [2012] investigated, among others, a mesophilic biogas plant with an annual throughput of around 50 000 Mg a$^{-1}$, which digests 3/4 sewage sludge and 1/4 bio-waste. The investment costs were at 120 € Mg$^{-1}$ a$^{-1}$, which is far below the range in Figure 7.4. An explanation could be that the digestate is transported to a coal co-firing plant, which eliminated investment costs for a post-composting facility. The operation costs of the plant were at 36 € Mg$^{-1}$. The annual revenues from electricity and heat, as well as from the fees for sewage sludge and bio-waste, equal these costs in full. This corresponds well with Figure 7.5 on page 83, which only covers the electricity revenues.

In 2014 Balussou et al. published further economic investigations about optimal biogas plant configurations in Germany. One outcome was that the EEG 2012, in contrast to previous versions, favors larger biogas plants over small ones. Another outcome was that the profitability of bio-waste-to-biogas plants shows a similar sensibility with regard to electricity revenues as well as to waste fees. This means that the EEG subsidy for bio-waste-to-biogas plants covers merely the additional costs of recovering energy from bio-waste and that the resulting revenues cannot pay in full for the overall bio-waste recycling.

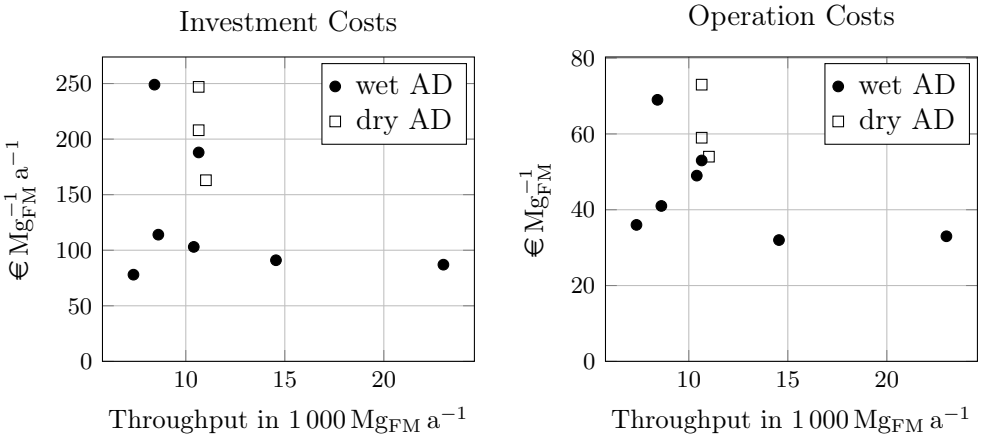


Figure 7.4: Investment and operation costs of ten agricultural biogas plants in Germany (based on Weiland et al. [2009]).

The costs of the anaerobic digestion for the MEFA are set at 60 € $Mg_{FM}^{-1}$ bio-waste, based on the costs for agricultural dry fermentation plants and the exclusion of the subsequent composting step.

### 7.3.2 Benefits from Biochar Application

Biochar could yield many ecological benefits within the proposed cascade. Yet its viability depends mostly on financial advantages. These can possibly be found within the anaerobic digestion, in the composting step, and in the agricultural application to the soil.

#### Biochar in Anaerobic Digestion

The achievable revenues for bio-waste-to-biogas plants from feeding electricity into the grid are visualized in Figure 7.5 on the next page. The revenues are based on the changing feed-in tariffs over time in Germany and on an electricity production range from around 170 to 220 $kWh_{el}$ $Mg^{-1}$ provided by Rosenwinkel et al. [2015, p 699]. An earlier report provides a broader range from around 170 to 290 $kWh_{el}$ $Mg^{-1}$ [Kern et al., 2010, p 135]. At the maximum 290 $kWh_{el}$ $Mg^{-1}$ the revenue with the current EEG (2014) would start with around 40 € $Mg^{-1}$, in contrast to the maximum 220 $kWh_{el}$ $Mg^{-1}$ by Rosenwinkel et al. [2015], which yields around 10 € less.

In cases where excess heat can be sold, the annual income would slightly rise and the maximum operation costs could therefore be higher than indicated in the graph. The revenue from electricity is based on plants with a capacity above 500 $kW_{el}$. For smaller plants the revenue would be slightly higher, around 12 % for plants installed since EEG 2012.

For the MEFA, the electricity revenues will be based on a biogas unit that produces 210 kWh $Mg_{FM}^{-1}$ bio-waste and that was installed in 2014. Because the capacity of the

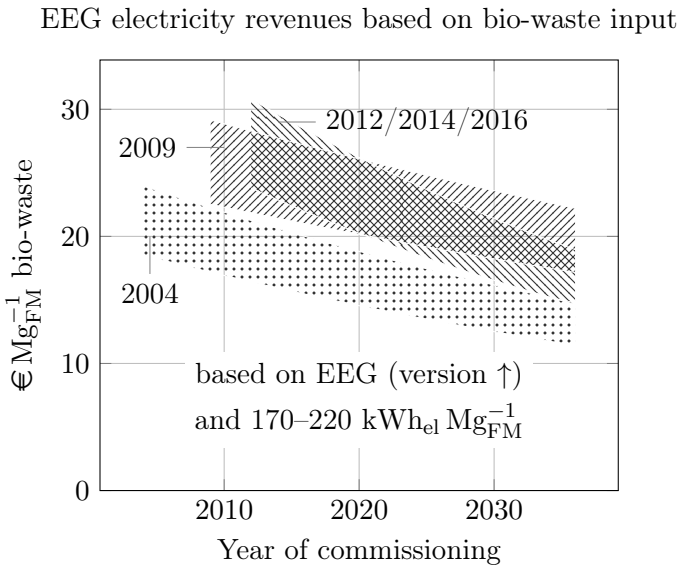


Figure 7.5: Guaranteed electricity revenues by several amendments of the Renewable Energy Act [EEG, 2004, 2009, 2012, 2014, 2016] based on year of commissioning (for the next 20 years) and the specific electricity production from bio-waste (according to Rosenwinkel et al. [2015, p 699]).

chosen unit is not larger than 500 kW, the compensation for the electricity will be 0.1526 € kWh$_{el}^{-1}$. In addition, the produced heat, 350 kWh Mg$_{FM}^{-1}$ bio-waste, is marketed at 0.05 € kWh$_{th}^{-1}$.

### Biochar in Composting

The reduction of carbon and nitrogen emissions during composting [Hua et al., 2008; Steiner et al., 2010; Chen et al., 2010; Hua et al., 2011; Dunst, 2015] is currently not financially rewarded. As long as the emissions are in the form of $CO_2$ and N, this would also make no sense, since they are part of the natural cycle and do not count as additional GHGs. Emissions of $CH_4$ and $N_2O$ with their higher GHG potential could be accounted for differently. However, these gases are a sign of suboptimal composting processes and can be avoided, not only with the help of biochar but also with a general improvement of the process conditions, e.g., by a good initial C:N-ratio and by a good aeration [Dunst, 2015].

An acceleration of the composting process [Dias et al., 2010; Theeba et al., 2012] could increase the throughput capacity of a plant. For high-throughput plants with space limitations, this could be especially beneficial. However, this would also necessitate a larger storage area because compost sales are not evenly distributed over the year but focused on spring and autumn. In addition, other plant units, like the forced aeration or the bio filter, could need an adjustment to a higher throughput. All in all, this possible

improvement would not immediately lead to financial benefits.

In contrast, an improved biochar compost should pay off instantly with increased sales revenues. However, as the financial results from Chapter 4 show, bio-waste compost is heavily undervalued. With such an economic background, it could be difficult to market an improved product. To take a closer look at this background, Figure 7.6 depicts the bio-waste gate fees and compost prices of 17 compost plants. In contrast to Chapter 4 with its 14 plants, three more were taken into account, which were not regarded there because they gave away their compost for free. The compost prices are again converted to the initial bio-waste amount (1 Mg bio-waste ≈ 0.5 Mg compost) in order to provide a better comparison between fees and sales prices.

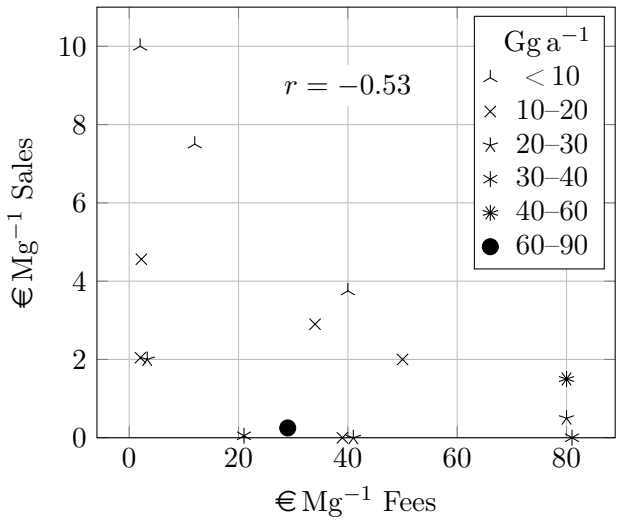


Figure 7.6: Negative correlation between bio-waste fees and bio-waste compost prices from 17 composting plants (compost prices converted to bio-waste input, data points with annual throughput in 1 000 Mg a$^{-1}$).

Bio-waste compost plants generally are part of the municipal waste management and are therefore co-financed with household waste fees. This makes them independent from compost sales, which in turn could lead to very low compost prices. However, there is also a moderate negative correlation ($-0.5 < r \leq -0.7$) between the additional gate fees and the compost prices. High gate fees and large annual amounts lead to low sales prices. This can have different reasons, e.g., a saturated regional demand or missing incentives to market compost at a reasonable price. However, the fact that higher compost prices are only found at smaller plants is important. Therefore, it is there where the soil benefits of biochar compost could more likely be monetized.

### Biochar in Soil

Recently, Shackley [2016] considered the economic benefits of biochar in European agriculture. He identified three possible routes that could make biochar financially viable. These are

1. pyrolysis as a means of treating organic waste materials,
2. valorization of biochar, and
3. the reemergence of carbon markets.

While the proposed cascade is already based on the first option, the third one seems rather unlikely. Apart from voluntary carbon markets like those reported by Dunst [2015], the established EU Emissions Trading System has utterly failed, considering that the emission prices since 2013 never were higher than around 8 € $Mg^{-1}$ $CO_2$ [Fusion Media, 2016]. This would relate to only 2.20 € for a ton of carbon stored in soil. Therefore, biochar has to be valorized, for example, as soil-improving substrate.

Vochozka et al. [2016] investigated the economic costs and benefits of three commercially available biochars. Two biochars were made from wood cuttings in screw-type reactors at 500 °C to 600 °C, which cost 233 € $Mg^{-1}$ and 261 € $Mg^{-1}$. The third biochar, digestate pyrolyzed at 350 °C to 450 °C with exhaust gas from biogas combustion engines, cost only 157 € $Mg^{-1}$. In field trials with 50 $Mg_{biochar}$ $ha^{-1}$ over a duration of four years, the impact on yields of potatoes, oats, clover, and wheat were measured. The two wood biochars yielded an average annual return of 1.87 and 3.33 € $Mg^{-1}_{biochar}$ $a^{-1}$. The biochar from digestate yielded 1.63 € $Mg^{-1}_{biochar}$ $a^{-1}$. Assuming these annual returns would be stable over a longer duration, the resulting payback time would be several decades. Therefore, this scenario cannot be regarded as a valorization of biochar.

Joseph et al. [2013] report on a different approach where biochar is applied at a very low rate in the form of a biochar fertilizer. It consists of 25 % biochar from wheat straw, 5 % bentonite, and a nutrient mixture of urea ($CO(NH_2)_2$), potassium chloride ($KCl$), and mono-ammonium phosphate ($NH_4H_2PO_3$). This novel fertilizer was compared to a conventional mineral fertilizer in rice cultivation. Table 7.2 summarizes the parameters of the two fertilizers, the application rates, the grain yields, and the resulting nitrogen (N) efficiencies.

Table 7.2: Comparison of a mineral fertilizer and a biochar-enhanced mineral fertilizer for rice cultivation (based on Joseph et al. [2013].

| **Treatment** | **Weight ratio** $N:P_2O_5:K_2O$ | **Total N applied** $kg\,ha^{-1}$ | **Grain yield** $Mg\,ha^{-1}$ | **N efficiency** $kg_{yield}\,kg^{-1}_{totalN}$ |
|---|---|---|---|---|
| Mineral fertilizer | 16:16:16 | 210 | 8.21±0.75 | 39 |
| Biochar fertilizer | 18:9:10 | 168 | 11.44±1.12 | 68 |

Based on previous experiences by the researchers at Nanjing Agricultural University, the biochar fertilizer was already being applied at a lower rate than the conventional one.

Nonetheless, the small amount of biochar had a great impact on the grain yield (+39 %), which could make this kind of application financially viable. Already, a similar fertilizer based on bamboo charcoal is marketed by a Chinese company [SEEK, 2016].

Schmidt et al. [2015] report on another low-dose application of biochar in Nepal. In contrast to the previous investigation, the biochar, locally produced from an invasive plant, is applied together with organic fertilizer. Less than 1 Mg $ha^{-1}$ are added to the common fertilizer treatment, which is composted cow dung and cow urine in the root zones of pumpkins. They found that even in already fertile soils, the addition of biochar increased the yields four-fold. These were even higher than what can be expected from the recommended application of mineral fertilizer. The authors suspect that the high water-holding and nutrient exchange capacity of the biochar were mostly responsible for the yield increases. The results show again that, if applied in the right way, even small amounts of biochar can have a great impact. In addition, they show the large potential for biochar in organic farming. While the authors did not provide any economic conclusions, it can be expected that the extra efforts with regard to the biochar production and application paid off with the first harvest.

In sum, biochar can efficiently increase agricultural yields in industrialized and organic farming. However, the successful examples differ substantially from the current application of bio-waste compost, and it is unlikely that farmers would pay more simply because some biochar would be part of the compost. Therefore, the financial assessment of the following MEFA will not take into account any yield increases based on the biochar integration.

## 7.4 Material and Energy-Flow Analysis (MEFA)

To estimate the ecological benefits of biochar in a bio-waste cascade, a material and energy-flow analysis (MEFA) is undertaken. The assessment of the MEFA results will be based on specifically developed indicators that include financial aspects as well.

### 7.4.1 Boundaries, Processes, and Flows

The analyzed system consists of the bio-waste treatment facility, including the units for pyrolysis, anaerobic digestion, and composting, as well as the soil where the final compost is applied. Any transport processes are excluded because they are not influenced by the addition of biochar to the system. The analysis is based on the conversion of 1 Mg bio-waste containing 50 % green waste. This 1 Mg is then allocated as input material for the single processes.

The ecological impacts are solely described with carbon and nitrogen flows as representatives for two important and volatile constituents of bio-waste and compost. Since no other materials are included and carbon and nitrogen are considered homogeneous substances, this MEFA could also be described as a substance and energy-flow analysis.

The energy, which represents the major financial benefit, is solely allocated as gross calorific value (HHV) or thermal energy to the carbon flows. Usable heat and electricity from the biogas unit are expressed as solitary energy flows. For reasons of clarity, nitrogen

is never related to any energy flow, even though it could be assigned a calorific value and it could transport thermal energy when emitted to the atmosphere. While the gross calorific value (chemical energy) and the thermal emissions are bound to the carbon flows, they are correlated with the full energy content of the material of which carbon is a constituent. For example, the HHV of the carbon flow from bio-waste is not the HHV of this carbon alone but of the amount of bio-waste that contains this amount of carbon. Therefore, any energy flow, including the calorific value of nitrogen or the thermal energy in vaporized water is subsumed in the carbon flows.

All flows are based on previously determined conversion factors, e.g., the amount of carbon that is converted to biogas and the amount that remains in the digestate. For reasons of clarity, the factors for both scenarios, with and without biochar, are compiled in Table 7.3. In addition, the data sources and eventual choices on which the factors are based will be provided shortly.

Table 7.3: MEFA conversion factors.

| **Conversion Factor** | **Unit** | **Current Cascade** | **Biochar Cascade** | **Based on** |
|---|---|---|---|---|
| For pyrolysis | | | | |
| HHV to biochar | % | | 35 | literature from Section 3.4 |
| green waste to biochar | % | | 25 | literature from Section 3.4 |
| C to biochar | % | | 50 | Obersteiner et al. [2015] |
| N to biochar | % | | 30 | literature from Section 3.4 |
| biochar stability | % | | 100 | simplification of Harris [1999] |
| For anaerobic digestion | | | | |
| HHV to biogas | % | 50 | 55 | literature data from Chapter 6 |
| bio-waste to digestate | % | 65 | 60 | literature data from Chapter 6 |
| biogas to power | % | 35 | | Kranert et al. [2010] |
| biogas to heat | % | 55 | | Kranert et al. [2010] |
| C in biogas HHV | $g\,MJ^{-1}$ | 22.4 | | derivation (50 % $CH_4$ in biogas) |
| For composting | | | | |
| HHV to compost | % | 50 | 55 | derivation from C conversion |
| C to compost | % | 50 | 55 | Dunst [2015] |
| N to compost | % | 70 | 85 | Dunst [2015] |
| For soil | | | | |
| C oxidised | % | 100 | | aid and KTBL [2013] |
| N used | % | 100 | | aid and KTBL [2013] |

Notes: HHV = higher heating value; C = carbon; N = nitrogen.

### 7.4.2 MEFA Results and Assessment

The MEFA results of the carbon, nitrogen, and energy flows of the bio-waste cascade are presented in Figure 7.7 on the following page for the scenario without biochar and in Figure 7.8 on page 90 for the scenario with biochar. As can be seen, both scenarios are based on the same amount of input, including energy content. The only difference is the allocation of green waste and bio-waste, which leads to differing material and energy outputs.

Based on the material and energy flows of the MEFA, a concise ecological and financial assessment of the cascade is undertaken. In addition, the legal framework for a potential implementation of the cascade is assessed as well.

#### Ecologic Assessment

Regarding the conversion factors in Table 7.3 on the preceding page, it is obvious that the analysis is based on several assumptions. Nonetheless, both scenarios reflect possible and also likely material and energy flows that could also be transferred to a European level. Based on the analysis, the biochar-enhanced cascade would result in 6 % fewer carbon and 4.5 % fewer nitrogen emissions. In terms of total amounts the cascade would yield

$$\Longrightarrow 71\,\mathrm{kg_C}\,\mathrm{Mg}^{-1}_{\text{bio-waste}}$$

$$\Longrightarrow 4.6\,\mathrm{kg_N}\,\mathrm{Mg}^{-1}_{\text{bio-waste}}$$

That means these amounts would be available in the compost and therefore also in the soil, likely increasing agricultural productivity. How high the effects of the produced biochar compost in soil would be depends to a large degree on the specific soil and is not considered within this analysis. However, it can be assumed the ecological overall impacts are positive.

Based on the assumed increase in biogas yields, around 10 % more salable electricity and heat are produced with the biochar addition. In terms of total amounts the cascade would yield

$$\Longrightarrow 116\,\mathrm{kWh_{el}}\,\mathrm{Mg}^{-1}_{\text{bio-waste}} \text{ (based on 500 kg bio-waste and 500 kg green waste!)}$$

$$\Longrightarrow 193\,\mathrm{kWh_{th}}\,\mathrm{Mg}^{-1}_{\text{bio-waste}} \text{ (based on the same ratio)}$$

The 10 % extra energy, calculated for all bio-waste-to-biogas plants, could raise the renewable electric capacity in Germany about half a percent. While this does not seem like much, it has to be considered that electricity from biogas can potentially be provided as constant but also as control energy, assisting fluctuating energy providers like sun and wind. Therefore, the realization of such an increase would be very helpful in the conversion to renewable energies.

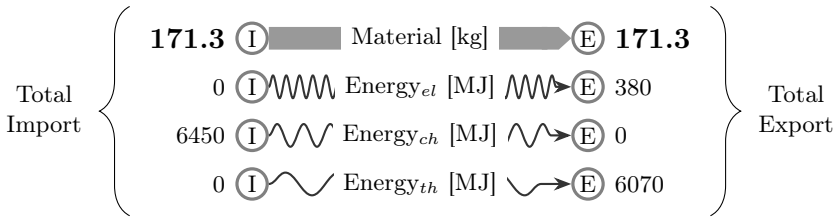


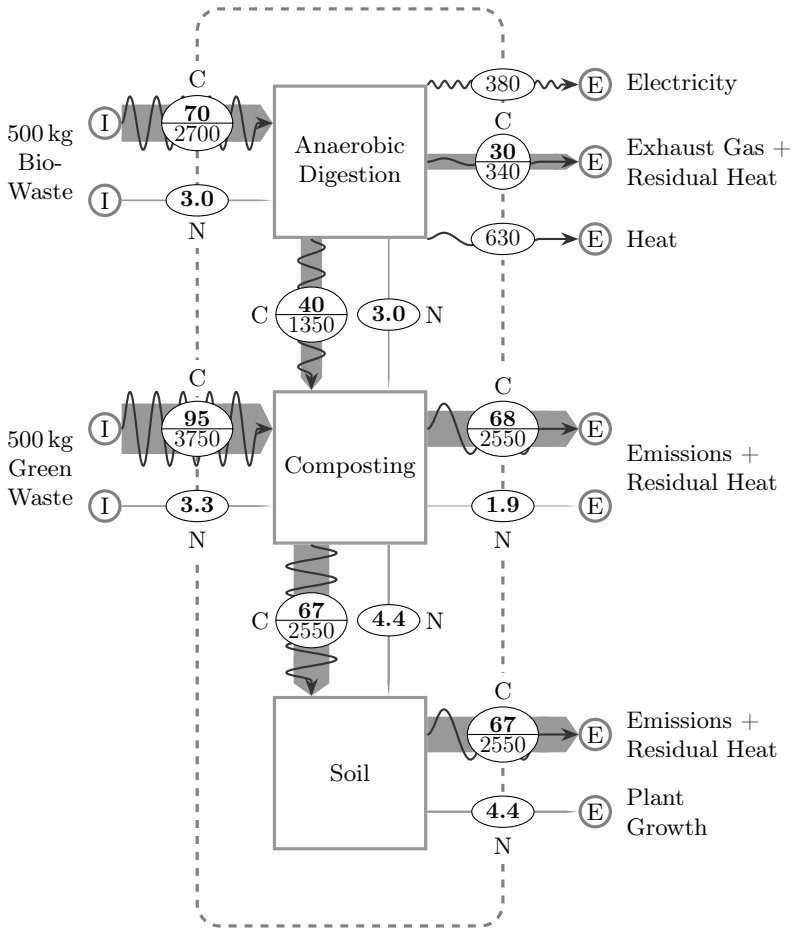


Figure 7.7: Carbon, nitrogen, and energy flows of the current bio-waste cascade.

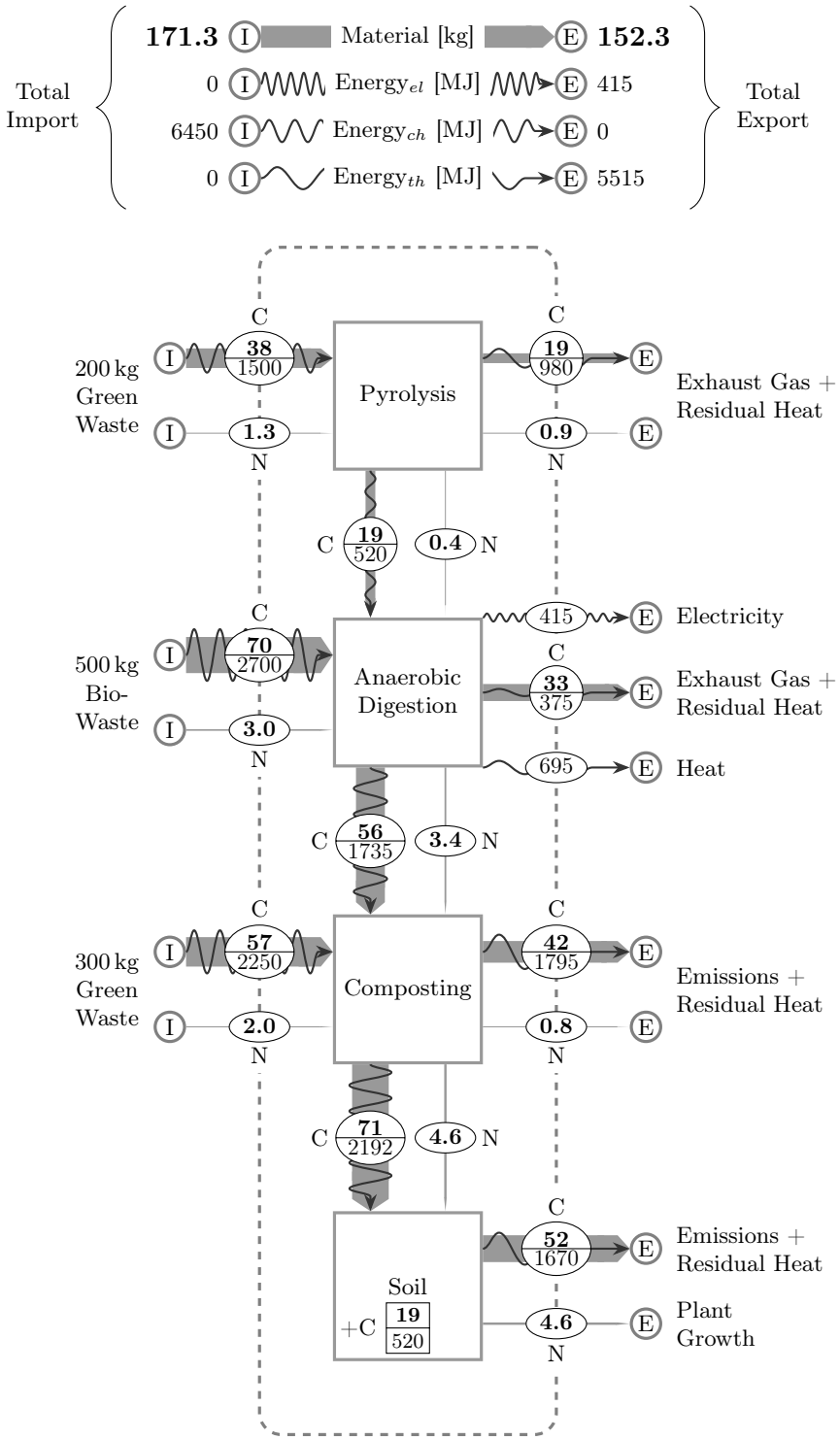


Figure 7.8: Carbon, nitrogen, and energy flows of the biochar-enhanced cascade.

### Financial Assessment

The resulting costs of the current and the biochar-enhanced cascade are visualized in Figure 7.9 and Figure 7.10. The biochar cascade causes around 6 % higher costs. The varied material flows, based on the conversion factors in Table 7.3, are fully considered in the financial calculation. As a result, both scenarios would require process units with slightly different throughput sizes.

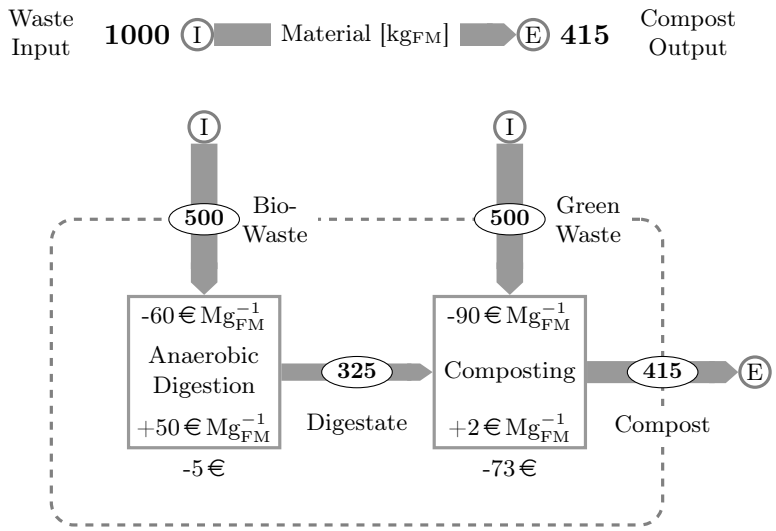


Figure 7.9: Financial costs of the current bio-waste cascade (78 € $Mg^{-1}_{bio\text{-}waste}$).

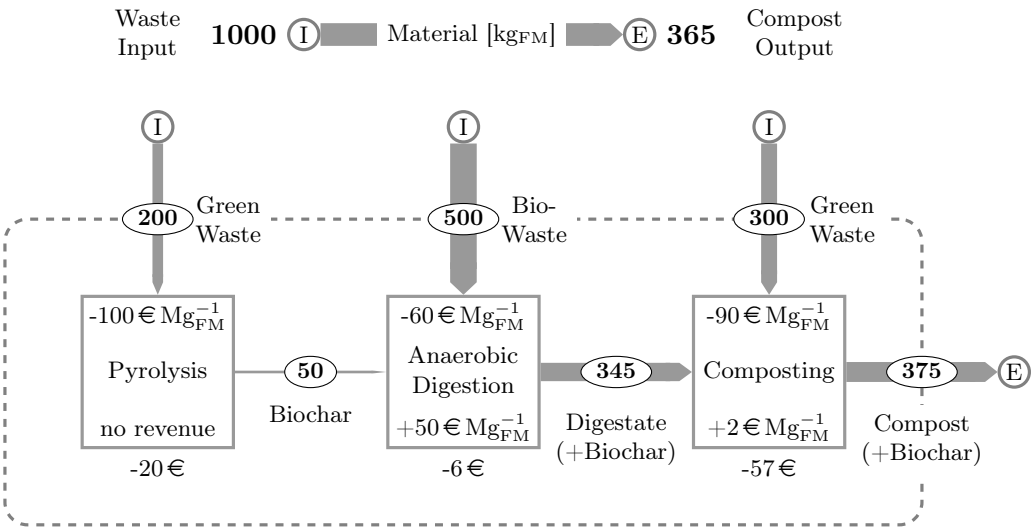


Figure 7.10: Financial costs of the biochar-enhanced cascade (83 € $Mg^{-1}_{bio\text{-}waste}$).

The current nutrient value of compost, based on mineral fertilizer prices, is around 11 € $Mg^{-1}$ [Schneider, 2016], which excludes the value of the organic soil matter. In contrast, the average compost price of around 4 € $Mg^{-1}$ is far below that (see Chapter 4). Therefore, the biggest impact on the financial viability of the cascade will be the improved revenues from biogas production. However, while the biochar scenario assumes a 10 % increase in biogas production, the revenues are not higher. This is due to the 10 % addition of biochar and the input-based calculation of all costs and revenues.

### Legislative Assessment

Current soil-related regulations in Germany prohibit the implementation of the proposed cascade with biochar. However, the necessary amendments to the regulations can be regarded as minor. In Europe, biochar is already admitted as a soil improver by Austrian, Italian, and Swiss authorities [Bachmann et al., 2016]. The implementation into the EU Fertiliser Regulation is planned but still in preparation [SCOPE, 2016, p 4].

A more fundamental problem is the current EU strategy to increase compost production. The European Commission pursues the end-of-waste status for compost, which shall facilitate the recycling of bio-waste by reducing administrative burdens and by increasing confidence in consumers [Saveyn and Eder, 2014]. However, except for some border regions, which could profit from new cross-border trade with compost, an increase of the overall recycling activities is unlikely. Since the demand side is not able or not willing to pay adequate prices for compost, bio-waste recycling still depends on waste fees. Therefore, a much more needed measure to increase the material recovery of bio-waste would be binding recycling quotas for every member state.

While bio-waste composting in Germany is widely established, there should be more orientation toward the demand side. In Austria, the EU member state with the highest composting quotas, farmers are allowed to participate in bio-waste recycling [arge kompost & biogas, 2016]. They profit from waste fees and have a high interest in producing the best possible compost for their own land. Although this is not the only way to raise the perceived value of compost, it should be regarded as a successful example that could also acknowledge the improved quality of biochar compost.

# 8 Summary

The interest in biochar resulted in over 2 000 scientific papers during the last ten years. Various aspects of biochar were investigated in great detail, like production, physical properties, and effects on agricultural yields, to name a few. However, one quite obvious aspect was rather neglected: the practical integration of biochar into the management of bio-waste. This work investigates the prospects for such an endeavor from a German and EU perspective.

There are different ways to integrate biochar into bio-waste recycling. The objectives for investigating the chosen path are explained in the subsequent section, followed by the state of science and technology, the applied investigation methods, and the main results. The summary is concluded with research questions resulting from this work.

### Objectives

In the early 2000s the pre-Columbian, anthropologically produced black soil in the Amazon basin, *„Terra Preta de Índio“*, received greater scientific attention. Compared to the surrounding poor soils, this very fertile anthrosol contains significantly higher levels of microorganisms and nutrients. The reason for this was determined to be the likewise high levels of charred biomass. This stable carbon, now called biochar, has since been intensively examined as an option to improve soil and to store carbon.

Although the creation of Terra Preta was most likely based on a purposeful utilization of organic residues from households and gardens, biochar plays no role in the current recycling of bio-waste. However, the implementation of biochar could lead to many improvements. Results from agricultural research suggest that not only the yield capacity of soils can be increased but also the process performance of composting and biogas plants. The latter is especially relevant since currently about 40 % of all collected bio-waste in Germany is recycled in an energy-material cascade consisting of anaerobic digestion and composting. The use of biochar in this cascade could then sequentially increase biogas yields, reduce greenhouse gas emissions, and improve compost quality.

To realize the aforementioned advantages, the concept of biochar has to be integrated into the existing bio-waste cascade as practically as possible. This requires the development of a theoretical scenario that allows the analysis of energy and material flows to evaluate biochar's recycling performance. Furthermore, the legal and economic framework has to be examined to assess the feasibility of the extended cascade and to suggest possible adjustments to the frameworks. This holistic approach requires the extension of the current state of science and technology.

### State of Science and Technology

The effects of biochar in different soils have been studied in detail. In contrast, the specific functions are far less understood because of the complex relationships between biology, biochar, and the remaining soil constituents. Nonetheless, although there are still many research opportunities, the safe use of biochar, particularly in combination with compost substrates, is scientifically clarified.

The composting of organic waste is a mature and widespread technology in Germany. Laboratory and field trials have shown that fewer carbon and nitrogen emissions occur during composting with the addition of biochar. This improves the ecological performance of the process and in the same instance increases the quality of compost with regard to carbon and nitrogen contents.

The anaerobic digestion of bio-waste is also a mature and established technology in Germany. Whether or not biochar additions improve the biochemical processes with regard to higher gas yields was previously investigated only for agricultural substrates. The effects of biochar in bio-waste fermentation are unknown.

The material and energy potentials of bio-waste recycling in Germany and Europe were examined on several occasions. Likewise, individual recycling technologies were analyzed for their economic and legal aspects and partly compared against each other. Whether a widespread cascade use of biochar in bio-waste management could be established under the current economic and legal framework requires further investigation.

### Applied Methods to Extend the State of Science and Technology

To determine the influence of biochar on the biogas yield in the fermentation of bio-waste, practical experiments are carried out on a pilot scale. With a percolated dry fermentation in 18 L-reactors, different biochar concentrations are tested in triplicate.

Statistical data about the state of bio-waste recycling in Germany and in the EU are merged in a geographic information system. To allow a precise evaluation of the recovery performance at the regional level, not only national recycling rates but also scattered regional data from the last ten years are considered. The legislative impact on recycling rates is elaborated on with a literature search.

With a questionnaire-based investigation of 59 composting plants, the technical specifications and the economic conditions of German bio-waste composting plants are determined. One focus lies on the financial aspects of different plant sizes.

The material and energy accounting of the biochar-enhanced bio-waste cascade is carried out with a specifically adapted material and energy-flow analysis (MEFA). The data used for the analysis are mostly from the literature and are supplemented by own derivations.

The assessment of the MEFA results is done with specifically developed indicators that cover the environmental and financial impacts of the cascade. In addition, the legislative challenges for the implementation of the cascade are evaluated and recommendations to overcome them are developed.

### Main Results

In a practical pilot study, the biochar amendment of 5 % resp. 10 %, based on the organic dry matter, led to an average increase of methane yields of 5 % resp. 3 %. However, the increases fall within comparably high standard deviations (7.7 % resp. 2.2 %), which are based on the heterogeneity of the bio-waste. While thus no clear evidence of improved biogas yields could be produced, it was demonstrated for the first time that bio-waste fermentation with a biochar amendment is possible without negative effects.

The novel compilation of the annual bio-waste recycling rates in the EU not only revealed large differences on the national level (Austria: $180\,\mathrm{kg\,cap^{-1}}$, Spain: $50\,\mathrm{kg\,cap^{-1}}$) but also on the regional level (Vienna: $106\,\mathrm{kg\,cap^{-1}}$, Madrid: $120\,\mathrm{kg\,cap^{-1}}$). With the exception of some younger member states, all countries have regions or urban centers with comparatively high recycling rates. Despite these existing models, only one third ($68\,\mathrm{kg\,cap^{-1}}$) of all bio-waste that could be collected in the EU is currently recycled.

For compost from German bio-waste recyclers, an average sales price of $4\,€\,\mathrm{Mg^{-1}}$ was determined. This equals only one third of the contained nutrient value based on mineral fertilizer prices. Even without taking into account the additional value of the organic carbon, bio-waste compost is clearly undervalued. Possible reasons are low demand or a missing product orientation. Against the first stands the fact that even if all available bio-waste in the EU were converted to biochar compost, it could only serve 3.7 % of all arable land in the EU ($10\,\mathrm{Mg\,ha^{-1}\,a^{-1}}$ application rate). For the second reason speaks the moderate negative correlation ($r = -0.53$) between waste fees and compost prices. That means high waste fees are often associated with undervalued compost.

For the integration of biochar into bio-waste recycling, a practical scenario was developed and analyzed. Based on this scenario, a biochar-enhanced bio-waste cascade, carbon and nitrogen emissions are reduced about 5 %, which simultaneously reflects a higher quality compost. The financial costs of the enhanced cascade are about $5\,€\,\mathrm{Mg^{-1}}$ bio-waste or 6 % higher than for the original cascade. That means for this scenario there is a near linear correlation between ecological improvement and financial costs.

However, under the current legal framework in the EU, a widespread implementation of the proposed cascade is unlikely. To increase bio-waste recycling, the European Commission promotes the end-of-waste status for compost, which should reduce bureaucratic obstacles for producers and increase confidence among consumers. Although this status would function as a trade liberalization, which could increase compost sales in border regions, it would not provide an incentive to invest in bio-waste recycling. The necessary financing for biogas and compost production will only be provided when there are either mandatory quotas for bio-waste recycling or subsidies that make it profitable.

While in Germany the financing of bio-waste recycling is a given, slightly higher waste fees or environmental subsidies would be required to pay for the reduced carbon and nitrogen emissions. Alternatively, a stronger product orientation could lead to appropriate compost prices that compensate for the improved quality. An example would be Austria, which reaches its high recycling rates, among other things, through a partly agricultural composting of municipal bio-waste. Thus, the interests of the compost producer and the compost consumer are combined in one facility.

### Resulting Research Questions

The results of this work revealed a number of obstacles that stand before a widespread implementation of the investigated bio-waste cascade. Some of them can be removed by appropriate legal adjustments. Others require further scientific research. In the following, some relevant research question are listed and briefly described:

- How does biochar affect the anaerobic digestion of bio-waste?
  Although it seems possible to increase methane yields with a biochar amendment, the specific functions are not fully understood. The retention of inhibitory substances, the supply of micro-nutrients, or the provision of stable habitats for bacteria all require more investigation.

- How does biochar-enhanced digestate affect the composting process?
  While biochar as an amendment in composting has already been investigated, it is not known whether biochar that underwent an anaerobic digestion process will have the same effects on the composting process.

- How can the gasification of green waste for energy and biochar be optimized?
  The gasification of wood chips is a mature and, in Germany, widespread technology. However, chopped green waste is a more heterogeneous material that requires more robust carburetors.

- How can biochar-enhanced compost provide optimal yield increases?
  In Germany, the application of bio-waste compost in agriculture is sufficiently regulated. However, the regulations do not lead to more fertile soils but rather try to preserve the status quo. In contrast, the aim of biochar compost, and of compost in general, should be the improvement of poor soils. To adapt regulations accordingly, sufficient scientific evidence to reach this goal is required.

- What is the best way to integrate biochar into bio-waste recycling?
  This work investigated one specific and relevant path to integrate biochar into bio-waste recycling. However, other alternatives may be equally relevant and worthy of further investigation.

Beyond this list, many additional research questions are conceivable. It is to be hoped that their pursuit will shed more light on the natural link between biochar and bio-waste management.

# Bibliography


1999/31/EC. European Commission. Council Directive on the landfill of waste (Landfill Directive), April 1999. URL http://eur-lex.europa.eu/LexUriServ/LexUriServ.do?uri=OJ:L:1999:182:0001:0019:EN:PDF. Page 52

2006R1907. European Parliament and Council. Registration, Evaluation, Authorisation and Restriction of Chemicals (REACH), December 2006. URL http://eur-lex.europa.eu/legal-content/EN/NOT/?uri=CELEX:02006R1907-20150601. Page 75

2008/98/EC. European Commission. Waste Framework Directive, December 2008. URL http://eur-lex.europa.eu/LexUriServ/LexUriServ.do?uri=CELEX:32008L0098:EN:NOT. Pages 5, 6, 25, 47, 53, 76, and 77

2009/28/EC. European Commission. Directive on the promotion of the use of energy from renewable sources, June 2009. URL http://eur-lex.europa.eu/LexUriServ/LexUriServ.do?uri=CELEX:32009L0028:EN:NOT. Page 53

2014/955/EU. European Commission. List of Waste Referred to in Article 7 of Directive 2008/98/EC, December 2014. URL http://eur-lex.europa.eu/legal-content/EN/TXT/HTML/?uri=CELEX:32014D0955. Page 25

AbfG, 1986. Abfallgesetz. Waste Act. Federal Law Gazette 27 August 1986 (BGBl. I pp. 1410–1501). Federal Republic of Germany. Page 38

aid and KTBL, editors. *Kompost in der Landwirtschaft*. aid infodienst Ernährung, Landwirtschaft, Verbraucherschutz e.V. und Kuratorium für Technik und Bauwesen in der Landwirtschaft e.V. (KTBL), Bonn, 2. edition, 2013. ISBN 978-3-8308-1048-3. Heft 1476. Page 87

Aivasidis, A. and C. Wandrey. Development and Scaleup of a High-Rate Biogas Process for Treatment of Organically Polluted Effluents. *Annals of the New York Academy of Sciences*, 589(1):599–615, May 1990. doi:10.1111/j.1749-6632.1990.tb24274.x. Page 13

Allesch, Astrid and Paul H. Brunner. Assessment methods for solid waste management: A literature review. *Waste Management & Research*, 32(6):461–473, June 2014. doi:10.1177/0734242X14535653. Page 14

Amlinger, Florian, Michael Pollak, and Enzo Favoino. Heavy metals and organic compounds from wastes used as organic fertilisers. Final Report TEND/AML/2001/07/20, European Commission Directorate-General for the Environment, July 2004. URL http://ec.europa.eu/environment/waste/compost/pdf/hm_finalreport.pdf. Page 58

Arcadis. Assessment of the options to improve the management of bio-waste in the European Union. Technical report, Arcadis Belgium nv and Eunomia, February 2010. Pages 47 and 49

arge kompost & biogas. Dezentrale Kompostierung in Österreich. Website of the Austrian compost and biogas consortium, 2016. URL `http://www.kompost-biogas.info`. Page 92

Avfall Sverige. Swedish Waste Management 2011, 2012. URL `http://www.avfallsverige.se/fileadmin/uploads/Rapporter/Utveckling/Rapporter_2011/SAH_eng111219.pdf`. Page 57

Bachmann, Hans Jörg, Thomas D. Bucheli, Alba Dieguez-Alonso, Daniele Fabbri, Heike Knicker, Hans-Peter Schmidt, Axel Ulbricht, Roland Becker, Alessandro Buscaroli, Diane Buerge, Andrew Cross, Dane Dickinson, Akio Enders, Valdemar I. Esteves, Michael W. H. Evangelou, Guido Fellet, Kevin Friedrich, Gabriel Gasco Guerrero, Bruno Glaser, Ulrich M. Hanke, Kelly Hanley, Isabel Hilber, Dimitrios Kalderis, Jens Leifeld, Ondrej Masek, Jan Mumme, Marina Paneque Carmona, Roberto Calvelo Pereira, Frederic Rees, Alessandro G. Rombolà, José Maria de la Rosa, Ruben Sakrabani, Saran Sohi, Gerhard Soja, Massimo Valagussa, Frank Verheijen, and Franz Zehetner. Toward the Standardization of Biochar Analysis: The COST Action TD1107 Interlaboratory Comparison. *J. Agric. Food Chem.*, 64(2):513–527, January 2016. doi:10.1021/acs.jafc.5b05055. Page 92

Balussou, David, Anne Kleyböcker, Russell McKenna, Dominik Möst, and Wolf Fichtner. An Economic Analysis of Three Operational Co-digestion Biogas Plants in Germany. *Waste and Biomass Valorization*, 3(1):23–41, March 2012. ISSN 1877-2641. doi:10.1007/s12649-011-9094-2. Page 81

Balussou, David, Tobias Heffels, Russell McKenna, Dominik Möst, and Wolf Fichtner. An Evaluation of Optimal Biogas Plant Configurations in Germany. *Waste and Biomass Valorization*, 5(5):743–758, October 2014. ISSN 1877-2641. doi:10.1007/s12649-013-9284-1. Page 81

Barth, Josef, Florian Amlinger, Enzo Favoino, Stefanie Siebert, Bertram Kehres, Ralf Gottschall, Marion Bieker, Anita Löbig, and Werner Bidlingmaier. Final report - Compost production and use in the EU. Final Report, ORBIT e.V. / European Compost Network ECN, Weimar, February 2008. URL `http://susproc.jrc.ec.europa.eu/activities/waste/documents/080229_EoW_final-report_v1.0.pdf`. Page 54

BGK. Zahlen/Daten/Fakten, 2011. URL `http://www.kompost.de`. Bundesgütegemeinschaft Kompost e.V. (Federal German Compost Quality Assurance Organisation). Page 37

Bidlingmaier, Werner. *Faktoren zur Steuerung der gemeinsamen Kompostierung von Abwasserschlamm mit organischen Strukturmitteln.* Number 12 in Stuttgarter Berichte zur Abfallwirtschaft. Schmidt, 1980. Page 30

Bidlingmaier, Werner, Eckhard Kraft, Stefan Sebök, and Christian Springer. Energieeffizienz und $CO_{2-eq}$-Bilanz von biologischen Verfahren zur Verwertung von Bioabfällen. EdDE Dokumentation 14, Entsorgergemeinschaft der deutschen Entsorgungswirtschaft e.V. – EdDE, April 2012. URL `http://www.entsorgergemeinschaft.de/edde-dokumentationen/`. Page 31

BioAbfV. Verordnung über die Verwertung von Bioabfällen auf landwirtschaftlich, forstwirtschaftlich und gärtnerisch genutzten Böden (Bioabfallverordnung). Biowaste Ordinance. Federal Republic of Germany, December 2013. URL `http://www.gesetze-im-internet.de/bioabfv/`. Pages 26, 58, 76, and 77

BNetzA. List of Power Plants – Renewables on 31 December 2014. Bundesnetzagentur (Federal Network Agency for Electricity, Gas, Telecommunications, Posts and Railway): Bonn, Germany, 2015. URL `http://www.bundesnetzagentur.de/cln_1421/EN/Areas/Energy/Companies/SecurityOfSupply/GeneratingCapacity/PowerPlantList/PubliPowerPlantList_node.html`. Page 61

Boateng, Akwasi A., Manuel Garcia-Perez, Ondřej Mašek, Robert Brown, and Bernardo del Campo. Biochar production technology. In Lehmann and Joseph [2015]. ISBN 978-0-203-76226-4. Page 35

Boie, Werner. *Vom Brennstoff zum Rauchgas: Feuerungstechnisches Rechnen mit Brennstoffkenngrößen und seine Vereinfachung mit Mitteln der Statistik*. Teubner, 1957. Page 27

Bouallagui, Hassib, L. Marouani, and Moktar Hamdi. Performances comparison between laboratory and full-scale anaerobic digesters treating a mixture of primary and waste activated sludge. *Resources, Conservation and Recycling*, 55(1):29–33, November 2010. ISSN 0921-3449. doi:10.1016/j.resconrec.2010.06.012. Page 13

Briand, Marc. Information on heavy metal content of the compost produced at Launay-Lantic (F) – Personal Communication, February 2013. URL `http://www.smitom-launay-lantic.com/`. Page 58

Brown, Sally. Greenhouse gas accounting for landfill diversion of food scraps and yard waste. *Compost Science & Utilization*, 24(1):11–19, January 2016. ISSN 1065-657X. doi:10.1080/1065657X.2015.1026005. Page 5

Brunn, Lilly, Christina Dornack, and Bernd Bilitewski. Application of laboratory scale experiments to industrial scale in case of anaerobic waste treatment. In *Proceedings Sardinia 2007, Eleventh International Waste Management and Landfill Symposium S. Margherita di Pula, Cagliari, Italy*, October 2007. Pages 13 and 14

Brunner, Paul H. and Helmut Rechberger. *Practical Handbook of Material Flow Analysis*. CRC Press LLC, 2004. ISBN 1-5667-0604-1. Pages 14, 16, 17, 18, 19, 20, and 21

Canali, Massimo, Karin Östergren, Pegah Amani, Lusine Aramyan, Siet Sijtsema, Otso Korhonen, Kirsi Silvennoinen, Graham Moates, Keith Waldron, Clementine O'Connor, et al. *Drivers of current food waste generation, threats of future increase and opportunities for reduction.* The European Commission, FP7-Coordination and Support Action, August 2014. ISBN 978-94-6257-354-3. URL `http://www.eu-fusions.org/index.php/publications`. Page 6

Chan, K. Y., L. Van Zwieten, I. Meszaros, A. Downie, and S. Joseph. Agronomic values of greenwaste biochar as a soil amendment. *Australian Journal of Soil Research*, 45(8): 629–634, 2007. ISSN 0004-9573. doi:10.1071/SR07109. Page 73

Channiwala, S.A. and P.P. Parikh. A unified correlation for estimating HHV of solid, liquid and gaseous fuels. *Fuel*, 81(8):1051–1063, May 2002. ISSN 0016-2361. doi:10.1016/S0016-2361(01)00131-4. Page 27

Chen, Ying-Xu, Xiang-Dong Huang, Zhi-Ying Han, Xiao Huang, Bin Hu, De-Zhi Shi, and Wei-Xiang Wu. Effects of bamboo charcoal and bamboo vinegar on nitrogen conservation and heavy metals immobility during pig manure composting. *Chemosphere*, 78(9):1177–1181, February 2010. doi:10.1016/j.chemosphere.2009.12.029. URL `http://dx.doi.org/10.1016/j.chemosphere.2009.12.029`. Page 83

Christensen, Thomas H. Life-cycle-assessment of waste management: possibilities and challenges. In *Proceedings of the 8th International Conference ORBIT 2012 – Global Assessment for Organic Resources and Waste Management*, 2012. Key-Note Speech. Page 43

Clement, Charles R., William M. Denevan, Michael J. Heckenberger, André Braga Junqueira, Eduardo G. Neves, Wenceslau G. Teixeira, and William I. Woods. The domestication of Amazonia before European conquest. *Proceedings of the Royal Society B: Biological Sciences*, 282(1812):2015.0813, July 2015. doi:10.1098/rspb.2015.0813. Page 1

Clunies-Ross, Tracey and Nicholas Hildyard. *The Politics of Industrial Agriculture.* Routledge, November 2013. ISBN 978-1-134-06386-4. Page 6

Couper, Mick P. *Designing Effective Web Surveys.* Cambridge University Press, Cambridge, 2008. ISBN 978-0-511-49937-1. Page 9

Daniel-Gromke, Jaqueline, Jan Liebetrau, Velina Denysenko, and Christian Krebs. Digestion of bio-waste - GHG emissions and mitigation potential. *Energy, Sustainability and Society*, 5(1), December 2015. ISSN 2192-0567. doi:10.1186/s13705-014-0032-6. Page 32

Destatis. Umwelt – Abfallentsorgung 2008, 2010. Statistisches Bundesamt (German Federal Statistical Office). Page 37

Destatis. Zahl der Woche vom 25. Juni 2013 – Polen mit 59 000 Tonnen Deutschlands Hauptlieferant für Grillkohle. Statistisches Bundesamt (German Federal Statistical Office), June 2013. URL `https://www.destatis.de/DE/PresseService/Presse/Pressemitteilungen/zdw/2013/PD13_026_p002pdf`. Page 78

Destatis. Statistisches Bundesamt (German Federal Statistical Office), 2015. URL `https://www.destatis.de/EN/Homepage.html`. Pages 1, 25, and 51

Dias, Bruno O., Carlos A. Silva, Fábio S. Higashikawa, Asunción Roig, and Miguel A. Sánchez-Monedero. Use of biochar as bulking agent for the composting of poultry manure: Effect on organic matter degradation and humification. *Bioresource Technology*, 101(4):1239–1246, February 2010. doi:10.1016/j.biortech.2009.09.024. Page 83

DTU. EASEWASTE – Environmental Assessment of Solid Waste Systems and Technologies, Documanual – April 2012 edition, 2012. URL `http://www.easewaste.dk`. Pages 39, 43, and 44

Dunst, Gerald. Die erste abfallrechtlich bewilligte Pflanzenkohle-Produktionsanlage Europas (The first legally approved waste biochar production facility in Europe). *Müll und Abfall*, 2013(12):661–664, December 2013. URL `http://www.muellundabfall.de/MA.12.2013.665`. Pages 46, 48, 62, 65, 72, 75, and 80

Dunst, Gerald. *Kompostierung und Erdenherstellung – Praxisbuch und Anleitung für Hausgarten, Landwirtschaft, Kommune und Profi*. Sonnenerde – Gerald Dunst Kulturerden GmbH, Riedlingsdorf, Austria, 2015. ISBN 978-3-9503088-1-5. Pages 23, 30, 31, 72, 83, 85, and 87

DüMV. Düngemittelverordnung vom 5. Dezember 2012 (BGBl. I S. 2482), die durch Artikel 1 der Verordnung vom 27. Mai 2015 (BGBl. I S. 886) geändert worden ist (German Fertilizer Ordinance), 2012. URL `http://www.gesetze-im-internet.de/d_mv_2012/index.html`. Page 77

EBC. European Biochar Certificate – Version 6 of 1st April 2015 – Guidelines for a Sustainable Production of Biochar. European Biochar Foundation, Arbaz, Switzerland, 2015. URL `http://www.european-biochar.org/en/download`. Pages 53 and 69

EBC 6.2E. European Biochar Certificate – Version 6.2E of 04th February 2016 – Guidelines for a Sustainable Production of Biochar. European Biochar Foundation, Arbaz, Switzerland, 2016. URL `http://www.europeanbiochar.org/en/download`. Page 74

EC. Polycyclic Aromatic Hydrocarbons – Occurrence in foods, dietary exposure and health effects, December 2002. URL `http://ec.europa.eu/food/fs/sc/scf/out154_en.pdf`. European Commission, Health and Consumer Protection Directorate-General, Scientific Committee on Food. Page 74

EC. Report on implementation of the community waste legislation Directive 2006/12/EC on waste, Directive 91/689/EEC on hazardous waste, Directive 75/439/EEC on

waste oils, Directive 86/278/EEC on sewage sludge, Directive 94/62/EC on packaging and packaging waste, Directive 1999/31/EC on the landfill of waste and Directive 2002/96/EC on waste electrical and electronic equipment for the period 2004–2006. Technical Report COM/2009/0633 final, European Commission, 2009. URL http://eur-lex.europa.eu/LexUriServ/LexUriServ.do?uri=CELEX:52009DC0633:EN:NOT. Page 52

EC. Future steps in bio-waste management in the European Union. Commission Staff Working Document COM(2010) 235 final, European Commission, May 2010. Page 47

EC. Glossary: Livestock unit (LSU), 2015. URL http://www.webcitation.org/6evzFpCxJ. European Commission. Page 50

EC 2003/2003. European Commission. Regulation (EC) No 2003/2003 of the European Parliament and of the Council of 13 October 2003 relating to fertilisers, October 2003. URL http://eur-lex.europa.eu/legal-content/EN/TXT/?uri=celex:32003R2003. Page 77

ECHA. European Chemicals Agency. Open substance Brief Profile – Charcoal, February 2016a. URL http://echa.europa.eu/brief-profile/-/briefprofile/100.036.697. Page 75

ECHA. European Chemicals Agency. Open substance Brief Profile – Charcoal, coconut shell, February 2016b. URL http://echa.europa.eu/brief-profile/-/briefprofile/100.065.412. Page 75

ECN. European Compost Network. About the ECN-QAS, 2015. URL http://www.compostnetwork.info/about-the-ecn-qas-2.html. Pages 53 and 54

ECN. Energy research Centre of the Netherlands. Phyllis2 – database for biomass and waste, 2016. URL https://www.ecn.nl/phyllis2. Pages 28 and 29

EEG. Erneuerbare-Energien-Gesetz. Act on granting priority to renewable energy sources. Federal Law Gazette 29 March 2000 (BGBl. I p. 305). Federal Republic of Germany, 2000. Page 38

EEG. Erneuerbare-Energien-Gesetz. Act on granting priority to renewable energy sources. Federal Law Gazette 21 July 2004 (BGBl. I p. 1918). Federal Republic of Germany, 2004. Page 83

EEG. Erneuerbare-Energien-Gesetz. Act on granting priority to renewable energy sources. Federal Law Gazette 25 October 2008 (BGBl. I p. 2074). Federal Republic of Germany, 2009. Page 83

EEG. Erneuerbare-Energien-Gesetz. Act on granting priority to renewable energy sources. Federal Law Gazette 22 December 2011 (BGBl. I p. 3044). Federal Republic of Germany, 2012. Pages 81, 82, and 83

EEG. Erneuerbare-Energien-Gesetz – EEG 2014 (Renewable Energy Act 2014) § 45 Vergärung von Bioabfällen (Anaerobic digestion of bio-waste). Federal Law Gazette of 21 Juli 2014 (BGBl. I S. 1066). Federal Republic of Germany, 2014. URL `http://www.gesetze-im-internet.de/eeg_2014/`. Pages 62 and 83

EEG. Entwurf eines Gesetzes zur Einführung von Ausschreibungen für Strom aus erneuerbaren Energien und zu weiteren Änderungen des Rechts der erneuerbaren Energien – Erneuerbare-Energien-Gesetz – EEG 2016 (Draft of the Renewable Energy Act 2016) § 43 Vergärung von Bioabfällen (Anaerobic digestion of bio-waste). Federal Ministry for Economic Affairs and Energy (BMWi), 2016. Pages 76 and 83

ENVAC. Waste solutions in a sustainable urban development, 2011. URL `http://www.envacgroup.com`. Page 57

EPEA. *Ökologisches Leistungsprofil von Verfahren zur Behandlung von biogenen Reststoffen – Kompass für die Entscheidungsfindung vor dem Hintergrund der geplanten Überarbeitung des Erneuerbaren-Energie-Gesetzes*. EPEA Internationale Umweltforschung GmbH, April 2008. Page 43

European Biochar Foundation. IBI-EBC discussion, 2015. URL `http://www.european-biochar.org/en/ebc-ibi`. Page 54

Eurostat, 2015. URL `http://ec.europa.eu/eurostat/data/database`. Database. Pages 7, 11, 12, 48, 49, 50, and 51

FAOSTAT. Forestry Production and Trade, 2014. URL `http://faostat3.fao.org/download/F/FO/E`. Food and Agriculture Organization of the United Nations Statistics Division. Page 52

Favoino, Enzo and Marco Ricci. The Economics of Different Separate Collection Schemes for Biowaste. In *Proceedings of the First Baltic Biowaste Conference*, Tallinn, Estonia, May 2006. Pages 55 and 56

Fischer, E., C. Uhl, and Frank Scholwin. Untersuchungen zum Vergleich der Stoff- und Energieflüsse von Biogasanlagen zur Vergärung nachwachsender Rohstoffe. In *Internationale Wissenschaftstagung Biogas Science 2009*, pages 181–192, Erding, Germany, December 2009. URL `http://www.lfl.bayern.de/mam/cms07/ilt/dateien/biogas_science_bd_1.pdf`. Page 20

Fowler, Floyd J. *Survey Research Methods*. SAGE Publications, 5. edition, 2014. ISBN 978-1-4833-2359-6. Page 10

Fusion Media. Carbon emissions overview. Company website, 2016. URL `http://www.investing.com/commodities/carbon-emissions`. Page 85

Gallenkemper, Bernhard and Gabriele Becker. Einfluß des Behältersystems und der Abfuhrintervalle auf die Hygiene und die Geruchsemissionen bei der Sammlung kompostierbarer Stoffe, 1996. URL `http://www.dbu.de/projekt_03270/_db_1036.html`. Page 55

Gallenkemper, Bernhard and Heiko Doedens. *Getrennte Sammlung von Wertstoffen des Hausmülls: abfallwirtschaftliche Grundlagen und ausgewählte Verfahren der getrennten Sammlung*. Erich Schmidt Verlag, 1994. Page 55

Gallert, C., A. Henning, and J. Winter. Scale-up of anaerobic digestion of the biowaste fraction from domestic wastes. *Water Research*, 37(6):1433–1441, March 2003. ISSN 0043-1354. doi:10.1016/S0043-1354(02)00537-7. Page 13

Gamble, Kevin James. Anaerobic Digestion from the Laboratory to the Field: An Experimental Study into the Scalability of Anaerobic Digestion. Master's thesis, Appalachian State University, August 2014. URL `http://libres.uncg.edu/ir/asu/f/Gamble,%20Kevin_2014_%20Thesis.pdf`. Page 13

German Biogas Association. Biogas Segment Statistics 2015/2015. Fachverband Biogas e.V. Freising, Germany, 2015. URL `http://www.biogas.org/edcom/webfvb.nsf/id/DE_Branchenzahlen`. Page 61

Giro, Francesc. Situation of the source separated collection of Biowaste in Catalunya. Balance of one decade (1993-2003). In *Proceedings of the Source Separation Workshop*, Barcelona, Spain, December 2003. ECN/ORBIT. Pages 56 and 57

Glaser, Bruno and Jago Jonathan Birk. State of the scientific knowledge on properties and genesis of anthropogenic dark earths in central amazonia (terra preta de índio). *Geochimica et Cosmochimica Acta*, 82:39–51, April 2012. doi:10.1016/j.gca.2010.11.029. Page 1

Glaser, Bruno, Ludwig Haumaier, Georg Guggenberger, and Wolfgang Zech. The 'terra preta' phenomenon: a model for sustainable agriculture in the humid tropics. *Naturwissenschaften*, 88(1):37–41, January 2001. doi:10.1007/s001140000193. Page 1

Global Footprint Network. Footprint for Nations, 2016. URL `http://www.footprintnetwork.org/en/index.php/GFN/page/footprint_for_nations/`. Pages 19 and 78

GRASS GIS. Geographic Resources Analysis Support System. Project website, 2016. URL `http://grass.osgeo.org/`. Page 13

Harris, Peter. On charcoal. *Interdisciplinary Science Reviews*, 24(4):301–306, 1999. Pages 34 and 87

Haug, Roger Tim. *The practical handbook of compost engineering*. Lewis Publishers, 1993. ISBN 0-87371-373-7. Page 30

Hilber, Isabel, Franziska Blum, Hans-Peter Schmidt, Sarah Hale, Gerard Cornelissen, Diane Bürge, and Thomas D. Bucheli. Biochar: contaminant source or sink? In Fricke, Klaus, Claus-Gerhard Bergs, Claudia Kamman, Peter Quicker, and Reiner Wallmann, editors, *Biokohle im Blick – Herstellung, Einsatz und Bewertung*, 73. Symposium des

ANS e.V., Berlin, Germany, September 2012. Arbeitskreis für die Nutzbarmachung von Siedlungsabfällen e.V. (ANS), ORBIT e.V. ISBN 3-935974-54-X. Page 74

Hogg, Dominic. Costs for Municipal Waste Management in the EU: Final Report. Technical report, Directorate General Environment, European Commission, 2002. URL `http://ec.europa.eu/environment/waste/studies/eucostwaste_management.htm`. Page 7

Hopkins, Darren. REACH Regulations for Biochar in Agriculture and Horticulture. Britisch Biochar Foundation Forum, February 2016. URL `http://www.britishbiocharfoundation.org/forum/viewtopic.php?f=8&p=484&t=383`. Page 75

Hua, Li, Weixiang Wu, Yuxue Liu, Murray B. McBride, and Yingxu Chen. Reduction of nitrogen loss and Cu and Zn mobility during sludge composting with bamboo charcoal amendment. *Environmental Science and Pollution Research*, 16(1):1–9, August 2008. doi:10.1007/s11356-008-0041-0. Page 83

Hua, Li, Yingxu Chen, Weixiang Wu, and Hongrui Ma. Microorganism communities and chemical characteristics in sludge-bamboo charcoal composting system. *Environmental Technology*, 32(6):663–672, April 2011. doi:10.1080/09593330.2010.510534. Page 83

Höllerl, Heinrich. Holzvergasertechnik – Heiß und spannend. *Forst & Technik – Zeitschrift für Waldarbeit, Forsttechnik und Holztransport*, 16(4):4–7, April 2016. ISSN 1435-1013. URL `http://www.holz-kraft.de/images/Presseberichte/SP_Holzenergie2016_April_05.pdf`. Page 35

IBI. International Biochar Initiative. About the IBI Biochar Certification Program, 2015. URL `http://www.biochar-international.org/certification`. Page 53

Inkscape. Professional vector graphics editor for Windows, Mac OS X and Linux. Project website, 2016. URL `https://inkscape.org`. Page 13

Inthapanya, Sangkhom and T. R. Preston. Biochar marginally increases biogas production but decreases methane content of the gas in continuous-flow biodigesters charged with cattle manure. *Livestock Research for Rural Development*, 25, November 2013. ISSN 0121-3784. URL `http://www.lrrd.org/lrrd25/11/sang25189.htm`. Pages 2, 62, and 66

Inthapanya, Sangkhom, T. R. Preston, and R. A. Leng. Biochar increases biogas production in a batch digester charged with cattle manure. *Livestock Research for Rural Development*, 12(24), December 2012. URL `http://lrrd.cipav.org.co/lrrd24/12/sang24212.htm`. Pages 62 and 66

ISO. International Organization for Standardization. ISO 14000 – Environmental management, 2016. URL `http://www.iso.org/iso/home/standards/management-standards/iso14000.htm`. Page 17

Jeffery, Simon, Frank G.A. Verheijen, Marijn van der Velde, and Ana Catarina Bastos. A quantitative review of the effects of biochar application to soils on crop productivity

using meta-analysis. *Agriculture, ecosystems & environment*, 144(1):175–187, 2011. Pages 34 and 46

Jia, Xingyong, Wenqiao Yuan, and Xiaotang Ju. Short Report: Effects of Biochar Addition on Manure Composting and Associated $N_2O$ Emissions. *Journal of Sustainable Bioenergy Systems*, 5(02):56, 2015. URL `http://www.scirp.org/journal/PaperInformation.aspx?paperID=56329`. Page 52

Jindo, Keiji, Koki Suto, Kazuhiro Matsumoto, Carlos Garcia, Tomonori Sonoki, and Miguel A. Sánchez-Monedero. Chemical and biochemical characterisation of biochar-blended composts prepared from poultry manure. *Bioresource Technology*, 110:396–404, April 2012. ISSN 0960-8524. doi:10.1016/j.biortech.2012.01.120. Pages 46 and 62

Joseph, Stephen D., Ellen Graber, Chee Hung Chia, P. Munroe, Scott Wilfred Donne, Torsten Thomas, S. Nielsen, Christopher Marjo, Helen Rutlidge, Gen-Xing Pan, L. Li, Paul Taylor, Aditya Rawal, and James M. Hook. Shifting paradigms: development of high-efficiency biochar fertilizers based on nano-structures and soluble components. *Carbon Management*, 4(3):323–343, June 2013. ISSN 1758-3012. doi:10.4155/cmt.13.23. Page 85

Kabir, Mohammed, Ashfaque Chowdhury, and Mohammad Rasul. Pyrolysis of Municipal Green Waste: A Modelling, Simulation and Experimental Analysis. *Energies*, 8(8): 7522–7541, July 2015. ISSN 1996-1073. doi:10.3390/en8087522. Page 35

Kashyap, Des Raj, K.S. Dadhich, and S.K. Sharma. Biomethanation under psychrophilic conditions: a review. *Bioresource Technology*, 87(2):147–153, April 2003. ISSN 09608524. doi:10.1016/S0960-8524(02)00205-5. Page 32

Kaudal, Bhawana Bhatta, Deli Chen, Dinesh Babu Madhavan, Adriana Downie, and Anthony Weatherley. Pyrolysis of urban waste streams: Their potential use as horticultural media. *Journal of Analytical and Applied Pyrolysis*, 112:105–112, March 2015. ISSN 0165-2370. doi:10.1016/j.jaap.2015.02.011. Page 35

Kern, Michael and Thomas Raussen. *Biogas-Atlas 2014/2015 – Anlagenhandbuch der Vergärung biogener Abfälle in Deutschland und Europa*. Witzenhausen-Institut, Witzenhausen, Germany, 2014. ISBN 3-928673-67-X. Pages 1, 14, 32, and 62

Kern, Michael, Thomas Raussen, Karsten Funda, Auke Lootsma, and Hubertus Hofmann. Aufwand und Nutzen einer optimierten Bioabfallverwertung hinsichtlich Energieeffizienz, Klima- und Ressourcenschutz. Technical Report 43/2010, Witzenhausen-Institut für Abfall, Umwelt und Energie GmbH, August 2010. URL `http://www.uba.de/uba-info-medien/4010.html`. Page 82

Khan, Naser, Ian Clark, Miguel A. Sánchez-Monedero, Syd Shea, Sebastian Meier, and Nanthi Bolan. Maturity indices in co-composting of chicken manure and sawdust with biochar. *Bioresource Technology*, 168:245–251, September 2014. ISSN 0960-8524. doi:10.1016/j.biortech.2014.02.123. Page 52

Kowalczyk, Alexandra, Sebastian Schwede, Mandy Gerber, and Roland Span. Scale up of laboratory scale to industrial scale biogas plants. In *Proceedings of the world renewable energy congress, Sweden: Linköping*, May 2011. doi:10.3384/ecp1105748. Page 13

Kranert, Martin, Klaus Cord-Landwehr, Paul Laufs, Bernhard Gallenkemper, Thomas Pretz, and Gerhard Rettenberger. *Einführung in die Abfallwirtschaft*. Springer-Verlag, Wiesbaden, Germany, 4. edition, 2010. Pages 25, 26, 30, 31, 32, 33, 80, 81, and 87

Kranert, Martin, Lea Böhme, Anna Fritzsche, and Ralf Gottschall. Einflussgrößen auf die separate Bioguterfassung unter besonderer Berücksichtigung der Qualität. EdDE Dokumentation 18, Entsorgergemeinschaft der deutschen Entsorgungswirtschaft e.V. – EdDE, February 2016. URL `http://www.entsorgergemeinschaft.de/edde-dokumentationen/`. Page 26

Kraus, Günther F., Bernhard Jährig, Erwin Binner, and Marion Huber-Humer. Einfluss unterschiedlicher Rotteparameter auf die N2O-Freisetzung während der Bioabfallkompostierung – erste Erkenntnisse aus Laborversuchen mit kontinuierlicher Lachgasmessung. *Österreichische Wasser- und Abfallwirtschaft*, 68(1-2):38–45, November 2015. ISSN 1613-7566. doi:10.1007/s00506-015-0283-2. Page 1

Kumar, Sushil, M.C. Jain, and P.K. Chhonkar. A note on stimulation of biogas production from cattle dung by addition of charcoal. *Biological Wastes*, 20(3):209–215, 1987. ISSN 0269-7483. doi:10.1016/0269-7483(87)90155-8. Pages 2, 62, and 66

Kuśmierz, Marcin, Patryk Oleszczuk, Piotr Kraska, Edward Pałys, and Sylwia Andruszczak. Persistence of polycyclic aromatic hydrocarbons (PAHs) in biochar-amended soil. *Chemosphere*, 146:272–279, March 2016. ISSN 0045-6535. doi:10.1016/j.chemosphere.2015.12.010. Page 74

Landfill Directive, 1999. Council Directive 1999/31/EC of 26 April 1999 on the landfill of waste. Official Journal of the European Communities L 182, vol. 42, 16 July 1999. Page 38

Laner, David, Helmut Rechberger, and Thomas Astrup. Systematic Evaluation of Uncertainty in Material Flow Analysis. *Journal of Industrial Ecology*, 18(6):859–870, May 2014. ISSN 1530-9290. doi:10.1111/jiec.12143. Page 21

Laner, David, Julia Feketitsch, Helmut Rechberger, and Johann Fellner. A Novel Approach to Characterize Data Uncertainty in Material Flow Analysis and its Application to Plastics Flows in Austria. *Journal of Industrial Ecology*, August 2015. ISSN 1530-9290. doi:10.1111/jiec.12326. Page 22

Lanz, Andrea Massimiliano, Angelo Federico Santini, Letteria Adella, Valeria Frittelloni, Manuela Marinacci, and Irma Lupica. *Rapporto Rifiuti Urbani 2012*. Number 163 in Rapporti. ISPRA, 2012. ISBN 978-88-448-0550-0. URL `http://www.isprambiente.gov.it/it/pubblicazioni/rapporti/rapporto-rifiuti-urbani-2012`. Page 55

Lehmann, Johannes and Stephen Joseph, editors. *Biochar for environmental management: science, technology and implementation*. Routledge, London, 2. edition, 2015. ISBN 978-0-203-76226-4. Pages 99 and 113

Leifert, Irmgard and Michael Schneider. Wie viel ist Kompost wirklich wert? *Getreide Magazin*, February 2007. Page 42

Liebetrau, Jan, Christian Krebs, Jaqueline Daniel-Gromke, Velina Denysenko, Walter Stinner, Eva Nebel, Carsten Cuhls, Birte Mähl, and Jürgen Reinhold. Analyse von Emissionen klimarelevanter Gase durch Biogasanlagen im Hinblick auf die ökologische Bewertung der Biogasgewinnung aus Abfällen. Final Report 03KB027, DBFZ Deutsches Biomasseforschungszentrum gemeinnützige GmbH, Leipzig, Germany, July 2013. URL `http://dx.doi.org/10.2314/GBV:779032535`. Page 32

Litaer, Bernard, Christian Arnsberger, Sally Goerner, and Stefan Brunnhuber. *Money and sustainability: The missing link*. Triarchy Press, Station Offices, Axminster, Devon. EX 13 5PF, United Kingdom, 1. edition, 2012. ISBN 978-1-908009-7-77. Page 4

Liu, Xiaoyu, Afeng Zhang, Chunying Ji, Stephen Joseph, Rongjun Bian, Lianqing Li, Genxing Pan, and Jorge Paz-Ferreiro. Biochar's effect on crop productivity and the dependence on experimental conditions – a meta-analysis of literature data. *Plant and Soil*, 373(1-2):583–594, December 2013. ISSN 1573-5036. doi:10.1007/s11104-013-1806-x. Page 34

Lopez-Capel, Elisa, Kor Zwart, Simon Shackley, Romke Postma, John Stenstrom, Daniel P. Rasse, Alice Budai, and Bruno Glaser. Biochar properties. In Shackley et al. [2016]. ISBN 978-0-415-71166-1. Page 36

Lü, X., R. Chang, R. Mao, P. Kang, and Y. Li. Effect of adding carbon-based materials on composting process and maturity of vegetable wastes. *Chinese Journal of Environmental Engineering*, 9(3):1422–1426, March 2015. ISSN 1673-9108. Page 1

Marris, Emma. Putting the carbon back: Black is the new green. *Nature*, 442(7103): 624–626, August 2006. doi:10.1038/442624a. Page 34

Massé, D. I., F. Croteau, L. Masse, and S. Danesh. The effect of scale-up on the digestion of swine manure slurry in psychrophilic anaerobic sequencing batch reactors. *Transactions of the ASAE*, 47(4):1367, 2004. ISSN 0001-2351. doi:10.13031/2013.16541. Pages 13 and 14

Mašek, Ondřej, Frederik Ronsse, and Dane Dickinson. Biochar production and feedstock. In Shackley et al. [2016]. ISBN 978-0-415-71166-1. Page 34

Mayer, Philipp, Isabel Hilber, Varvara Gouliarmou, Sarah E. Hale, Gerard Cornelissen, and Thomas D. Bucheli. How to Determine the Environmental Exposure of PAHs Originating from Biochar. *Environmental Science & Technology*, 50(4):1941–1948, February 2016. ISSN 1520-5851. doi:10.1021/acs.est.5b05603. Page 74

McGreevy, Steven R., Akira Shibata, and Yusuke Tanabiki. Biochar in Japan: Makoto Ogawa recalls a lifetime of work on biochar, fungi, and plant growth interaction. *Biochar Journal*, January 2016. ISSN 2297-1114. URL `http://www.biochar-journal.org/en/ct/75`. Page 34

Merriam-Webster, April 2016. URL `http://unabridged.merriam-webster.com/`. Unabridged Dictionary, Springfield, MA, USA. Pages 30, 32, and 34

Meyer, Daniel. Biochar – A Survey. ENER-1346 Special Assignment in Energy and Process Engineering, Tampere University of Technology, Finland, May 2009. URL `https://www.meyer-kohlstock.de/Biochar.pdf`. Page 34

Meyer-Kohlstock, Daniel. Deutschland, deine Holzkohle (Germany, your charcoal). Personal Website, September 2013. URL `https://stoffstromer.de/2013/09/28/deutschland-deine-holzkohle/`. Page 79

Meyer-Kohlstock, Daniel and Eckhard Kraft. The integration of Terra Preta Sanitation in European nutrient cycles – Options for alternative policies and economies. In Bettendorf, Torsten, Claudia Wendland, and Ralf Otterpohl, editors, *Terra Preta Sanitation*. Deutsche Bundesstiftung Umwelt, 2014. ISBN 978-3-00-046586-4. URL `http://www.terra-preta-sanitation.net/cms/index.php?id=58`. Page 73

Meyer-Kohlstock, Daniel, Gunnar Hädrich, Werner Bidlingmaier, and Eckhard Kraft. The Value of Composting in Germany – Economy, Ecology, and Legislation. *Waste Management*, 33(3):536–539, March 2013. ISSN 0956-053X. doi:10.1016/j.wasman.2012.08.020. Pages 37, 54, and 59

Meyer-Kohlstock, Daniel, Tonia Schmitz, and Eckhard Kraft. Organic Waste for Compost and Biochar in the EU: Mobilising the Potential. *Resources*, 4(3):457–475, 2015. ISSN 2079-9276. doi:10.3390/resources4030457. Page 45

Meyer-Kohlstock, Daniel, Thomas Haupt, Erik Heldt, Nils Heldt, and Eckhard Kraft. Biochar as Additive in Biogas Production from Bio-Waste. *Energies*, 9(4):247, 2016. ISSN 1996-1073. doi:10.3390/en9040247. Page 61

Millers-Dalsjö, Daino and Hans Lundborg. Biowaste Slurry Collection, March 2012. URL `http://www.balticbiogasbus.eu/web/publications/supply-of-biogas-bbb-wp4.aspx`. Page 57

Mitchell, Gordon. Problems and fundamentals of sustainable development indicators. *Sustainable Development*, 4(1):1–11, March 1996. doi:10.1002/(SICI)1099-1719(199603)4:1<1::AID-SD24>3.0.CO;2-N. Page 22

Monmonier, Mark. *How to Lie with Maps*. University of Chicago Press, Chicago, 2. edition, 1996. ISBN 978-0-226-02900-9. Page 12

Montgomery, David R. *Dirt: The Erosion of Civilizations*. Univ of California Pr, Berkeley, September 2008. ISBN 978-0-520-25806-8. Page 5

Moreno-Jiménez, Eduardo, José Manuel Fernández, Markus Puschenreiter, Paul N. Williams, and César Plaza. Availability and transfer to grain of As, Cd, Cu, Ni, Pb and Zn in a barley agri-system: Impact of biochar, organic and mineral fertilizers. *Agriculture, Ecosystems & Environment*, 219:171–178, March 2016. doi:10.1016/j.agee.2015.12.001. Page 74

Morvan, Bernard and Jean-Philippe Blanquart. Residual municipal solid wastes within a rotary drum reactor: impact of retention time. In *ISWA World Congress 2009 – Proceedings*, Lisbon, Portugal, 2009. ISBN 978-989-96421-1-9. URL `http://www.iswa.org/uploads/tx_iswaknowledgebase/paper26.pdf`. Page 59

Mumme, Jan, Franziska Srocke, Kathrin Heeg, and Maja Werner. Use of biochars in anaerobic digestion. *Bioresource Technology*, 164:189–197, July 2014. ISSN 0960-8524. doi:10.1016/j.biortech.2014.05.008. Pages 62 and 66

NCASI. An analysis of the methods used to address the carbon cycle in wood and paper product LCA studies. Technical report, National Council for Air and Stream Improvement, Research Triangle Park, N.C., USA, 2004. URL `http://www.ncasi.org/publications/Detail.aspx?id=2628`. Page 18

Obersteiner, Gudrun, Marko Sitter, Andreas Pertl, and Marion Huber-Humer. Umweltauswirkungen der pyrolytischen Verkohlung. *Österreichische Wasser- und Abfallwirtschaft*, 67(9-10):369–376, October 2015. ISSN 1613-7566. doi:10.1007/s00506-015-0263-6. Pages 72, 73, and 87

OECD. Towards Sustainable Development – Indicators to Measure Progress. Proceedings of the OECD Rome Conference, Organisation for Economic Co-operation and Development, 2000. URL `http://www.oecd.org/site/worldforum/33703694.pdf`. Page 4

Parikh, Jigisha, S.A. Channiwala, and G.K. Ghosal. A correlation for calculating HHV from proximate analysis of solid fuels. *Fuel*, 84(5):487–494, March 2005. ISSN 0016-2361. doi:10.1016/j.fuel.2004.10.010. Page 28

Park, Chris C. *Tropical Rainforests*. Routledge, London, 2002. ISBN 0-203-41346-6. Page 1

Phillips, David H. Polycyclic aromatic hydrocarbons in the diet. *Mutation Research/Genetic Toxicology and Environmental Mutagenesis*, 443(1-2):139–147, July 1999. ISSN 1383-5718. doi:10.1016/S1383-5742(99)00016-2. Page 74

Pyreg. Innovative Recycling Solutions. Company website, 2016. URL `http://www.pyreg.de/`. Pages 72 and 75

QGIS. A Free and Open Source Geographic Information System. Project website, 2016. URL `http://www.qgis.org`. Page 13

Rajagopal, Rajinikanth, Daniel I. Massé, and Gursharan Singh. A critical review on inhibition of anaerobic digestion process by excess ammonia. *Bioresource Technology*, 143:632–641, September 2013. ISSN 0960-8524. doi:10.1016/j.biortech.2013.06.030. Page 65

Ramke, Hans-Günter. Plausibilitätskontrollen in der Analytik von Zuordnungsparametern fester Siedlungsabfälle. In *Fachgespräch Feststoffuntersuchung 2008 – Neue Entwicklungen in der Abfall- und Altlastenuntersuchung*. BEW Bildungsstätte Essen, Ministerium für Umwelt und Naturschutz, Landwirtschaft und Verbraucherschutz des Landes NRW, 2008. URL `http://www.hs-owl.de/fb8/fachgebiete/abfallwirtschaft/pdf/Essen_2008_Beitrag_Internet.pdf`. Page 28

Rauh, Stefan. Entwicklungsperspektiven der Abfallvergärung (Development prospects of bio-waste fermentation). *H&K aktuell*, 2016(8/9):5–6, July 2016. URL `http://www.kompost.de/publikationen/hk-aktuell/ausgaben-der-hk-aktuell`. Page 1

Reza, M. Toufiq, Janet Andert, Benjamin Wirth, Daniela Busch, Judith Pielert, Joan G. Lynman, and Jan Mumme. Hydrothermal Carbonization of Biomass for Energy and Crop Production. *Applied Bioenergy*, Volume 1:11–29, 2014. doi:10.2478/apbi-2014-0001. Page 34

Riber, Christian, Claus Petersen, and Thomas H. Christensen. Chemical composition of material fractions in Danish household waste. *Waste Management*, 29(4):1251–1257, April 2009. doi:10.1016/j.wasman.2008.09.013. Page 58

Ricci-Jürgensen, Marco, Christian Garaffa, Friedrich von Hesler, and Michele Giavini. Erfassung von Bioabfällen in europäischen Nachbarländern. *Müll und Abfall - Fachzeitschrift für Abfall- und Ressourcenwirtschaft*, 2012(09):452–455, September 2012. ISSN 0027-2957. URL `http://www.muellundabfall.de/MA.09.2012.452`. Page 56

Ronsse, Frederik, Sven van Hecke, Dane Dickinson, and Wolter Prins. Production and characterization of slow pyrolysis biochar: influence of feedstock type and pyrolysis conditions. *GCB Bioenergy*, 5(2):104–115, March 2013. ISSN 1757-1693. doi:10.1111/gcbb.12018. Pages 35 and 36

Rosenwinkel, Karl-Heinz, Helmut Kroiss, Norbert Dichtl, Carl-Franz Seyfried, and Peter Weiland, editors. *Anaerobtechnik*. Springer, Berlin, Heidelberg, 2015. ISBN 978-3-642-24895-5. URL `http://link.springer.com/10.1007/978-3-642-24895-5`. Pages 82 and 83

Ross, Andrew. FERTIPLUS Deliverable 3.5 – Data set on properties and composition of biochar (obtained from Surjit Singh in August 2013) – Revision 4.0 (Final Version) of 29 August 2015. Unpublished, 2015. Page 69

Rumphorst, M. and H. Kübler. Ökologische Bewertung von Verfahren zur Bioabfallbehandlung unter den Aspekten Energiebilanz und CO2-Emission. *Müll und Abfall*, August 1996. Page 43

Rödger, Jan-Markus, Waldemar Ganagin, Andreas Krieg, Christian Roth, and Achim Loewen. Steigerung des Biogasertrages durch die Zugabe von Pflanzenkohle. *Müll und Abfall*, 9(13):477, September 2013. URL `http://www.muellundabfall.de/.download/107043/mua_20130908.pdf`. Pages 2, 62, and 66

Saveyn, Hans and Peter Eder. End-of-waste criteria for biodegradable waste subjected to biological treatment (compost & digestate): technical proposals. Technical report, European Commission, Joint Research Centre, Institute for Prospective Technological Studies, Seville, Spain, 2014. URL `http://ftp.jrc.es/EURdoc/JRC87124.pdf`. Page 92

Schattner-Schmidt, Silvia et al. Vergleich verschiedener Kompostierungsverfahren unter den Aspekten Stoffstrombilanz, Energiebilanz und Kosten. In *Aufbereitung und Verwertung organischer Reststoffe im ländlichen Raum*, number 25 in Kolloquium Agrartechnik. Institut für Landtechnik, Technische Universität München, VDI/MEG, 1996. Page 43

Schmidt, Hans-Peter. 55 Uses of Biochar. *Journal for terrior-wine and biodiversity*, December 2012. ISSN 1663-0521. URL `http://www.ithaka-journal.net/55-anwendungen-von-pflanzenkohle?lang=en`. Pages 46 and 61

Schmidt, Hans-Peter, Claudia Kammann, Claudio Niggli, Michael W.H. Evangelou, Kathleen A Mackie, and Samuel Abiven. Biochar and biochar-compost as soil amendments to a vineyard soil: influences on plant growth, nutrient uptake, plant health and grape quality. *Agriculture, Ecosystems & Environment*, 191:117–123, June 2014a. Page 46

Schmidt, Hans-Peter, Bishnu Pandit, Vegard Martinsen, Gerard Cornelissen, Pellegrino Conte, and Claudia Kammann. Fourfold Increase in Pumpkin Yield in Response to Low-Dosage Root Zone Application of Urine-Enhanced Biochar to a Fertile Tropical Soil. *Agriculture*, 5(3):723–741, September 2015. ISSN 2077-0472. doi:10.3390/agriculture5030723. Page 86

Schmidt, Morgan J., Anne Rapp Py-Daniel, Claide de Paula Moraes, Raoni B.M. Valle, Caroline F. Caromano, Wenceslau G. Texeira, Carlos A. Barbosa, João A. Fonseca, Marcos P. Magalhães, Daniel Silva do Carmo Santos, Renan da Silva e Silva, Vera L. Guapindaia, Bruno Moraes, Helena P. Lima, Eduardo G. Neves, and Michael J. Heckenberger. Dark earths and the human built landscape in Amazonia: a widespread pattern of anthrosol formation. *Journal of Archaeological Science*, 42:152–165, February 2014b. doi:10.1016/j.jas.2013.11.002. Page 1

Schmidt-Bleek, Friedrich. *Das MIPS-Konzept: weniger Naturverbrauch - mehr Lebensqualität durch Faktor 10*. Droemer Knaur, München, 1998. ISBN 3-426-26982-1. Page 16

Schmitz, Tonia. Die energetische, stoffliche und wirtschaftliche Bilanzierung kombinierter Anlagen zur Algenkultivierung und Biogasgewinnung. Master's thesis, Bauhaus-Universität Weimar, Coudraystr. 7, 99423 Weimar, Germany, February 2014. Page 18

Schneider, Michael. Konsequenzen des Düngerechts für die Vermarktung von Kompost- und Gärprodukten. In Wiemer, Klaus, Michael Kern, and Thomas Raussen, editors, *Bio- und Sekundärrohstoffverwertung XI*, Kassel, Germany, 2016. Witzenhausen-Institut für Abfall, Umwelt und Energie GmbH. ISBN 3-928673-72-6. URL `http://www.abfallforum.de/index.php/de/nachlese-2016`. Page 92

Schott, Anna Bernstad Saraiva, Henrik Wenzel, and Jes la Cour Jansen. Identification of decisive factors for greenhouse gas emissions in comparative life cycle assessments of food waste management – an analytical review. *Journal of Cleaner Production*, 119: 13–24, April 2016. ISSN 0959-6526. doi:10.1016/j.jclepro.2016.01.079. Pages 5 and 18

Schulz, Hardy, Gerald Dunst, and Bruno Glaser. Positive effects of composted biochar on plant growth and soil fertility. *Agronomy for Sustainable Development*, 33(4):817–827, October 2013. Page 46

Schwab, Oliver, Ottavia Zoboli, and Helmut Rechberger. A Data Characterization Framework for Material Flow Analysis. *Journal of Industrial Ecology*, February 2016. ISSN 1530-9290. doi:10.1111/jiec.12399. Page 22

SCOPE. Proposed biochar fertiliser criteria. Newsletter of the European Sustainable Phosphorus Platform, No. 121, June 2016. URL `http://www.phosphorusplatform.eu/scope-in-print/past-issues`. Page 92

Scopus. Results for publications with "biochar" in the title, from september 2007 till august 2016. Abstract and citation database of peer-reviewed literature, provided by the academic publishing company Elsevier., May 2016. URL `https://www.scopus.com`. Page 1

SEEK. Biochar Organic Fertilizer. Company website, 2016. URL `http://www.seekfertilizer.com`. Page 86

Shackley, Simon. The economic viability and prospects for biochar in Europe. In Shackley et al. [2016]. ISBN 978-0-415-71166-1. Page 85

Shackley, Simon, Abbie Clare, Stephen Joseph, Bruce A. McCarl, and Hans-Peter Schmidt. Economic evaluation of biochar systems: current evidence and challenges. In Lehmann and Joseph [2015]. ISBN 978-0-203-76226-4. Page 80

Shackley, Simon, Greet Ruysschaert, Kor Zwart, and Bruno Glaser, editors. *Biochar in European Soils and Agriculture – Science and Practice*. Routledge, London, 1. edition, 2016. ISBN 978-0-415-71166-1. Pages 108 and 113

Slater, Rachel A. and Jim Frederickson. Composting municipal waste in the UK: some lessons from Europe. *Resources, Conservation and Recycling*, 32(3-4):359–374, July 2001. ISSN 0921-3449. doi:10.1016/S0921-3449(01)00071-4. Page 58

SMITOM. MBT plant in Launay-Lantic, 2013. URL `http://www.smitom-launay-lantic.com/`. Page 59

Spanner Re². Die Spanner Holz-Kraft-Anlage, 2016. URL `http://www.holz-kraft.de/de/produkte-hv/holz-kraft-anlage`. Page 35

Springer, Christian. *Vom Substitutionspotential und der Energiebilanz des Komposts zum Entwurf eines Effizienzpasses für biologische Abfallbehandlungsanlagen*. PhD thesis, Bauhaus-Universität Weimar, 2010. Dissertation at the Department of Waste Management. Page 39

Stadt Drolshagen. Abfallbeseitigungssystem, January 2013. Page 55

Stanford, Kim, V. Nelson, Brian Sexton, T.A. McAllister, Xiying Hao, and Francis J. Larney. Open-Air Windrows for Winter Disposal of Frozen Cattle Mortalities: Effects of Ambient Temperature and Mortality Layering. *Compost Science & Utilization*, 15 (4):257–266, September 2007. ISSN 2326-2397. doi:10.1080/1065657X.2007.10702342. Page 30

Steiner, Christoph, K.C. Das, Nathan Melear, and Donald Lakly. Reducing Nitrogen Loss during Poultry Litter Composting Using Biochar. *Journal of Environment Quality*, 39 (4):1236–1242, July 2010. ISSN 1537-2537. doi:10.2134/jeq2009.0337. Pages 46, 62, and 83

Steiner, Martin. An assessment of MBT across Europe. In *Biological treatment of biowaste composting, anaerobic digestion, MBT: challenges, opportunities, innovative strategies*, Perugia, Italy, May 2006. ISWA. URL `http://www.iswa.org/uploads/tx_iswaknowledgebase/btw20.pdf`. Page 58

Su, Yu-Ting and Jung-Hong Hong. A new perspective towards the visualization of the temporal aspects of geographic information. In *Proceedings of the ACRS 2015*, Manila, Philippines, October 2015. URL `http://acrs2015.ccgeo.info/proceedings/TU3-6-6.pdf`. Page 13

SWE. Stadtwerke Erfurt Gruppe – Bioabfallverwertung (Public utility company Erfurt – Bio-waste utilisation), 2016. URL `http://www.webcitation.org/6ePn1HRkD`. Pages 64 and 67

Sánchez-García, María, Jose Antonio Alburquerque, Miguel A. Sánchez-Monedero, Asuncion Roig, and Maria Luz Cayuela. Biochar accelerates organic matter degradation and enhances N mineralisation during composting of poultry manure without a relevant impact on gas emissions. *Bioresource Technology*, 192:272–279, September 2015. ISSN 0960-8524. doi:10.1016/j.biortech.2015.05.003. Pages 46 and 62

Tantau, Till. The TikZ and PGF Packages – Manual for version 3.0.1a, August 2015. URL `https://www.ctan.org/pkg/pgf`. Page 20

TASi, 1993. Technische Anleitung Siedlungsabfall. Technical Instructions on Waste from Human Settlements. Federal Gazette 99a. 14 May 1993 (BAnz.). Federal Republic of Germany. Page 38

Theeba, Manickam, Robert Thomas Bachmann, Z.I. Illani, M. Zulkefli, M.H.A. Husni, and A.W. Samsuri. Characterization of local mill rice husk charcoal and its effect on compost properties. *Malaysian Journal of Soil Science*, 16(1):89–102, 2012. URL `http://www.msss.com.my/mjss/Full%20Text/Vol%2016/Theeba.pdf`. Page 83

Tourangeau, Roger and Ting Yan. Sensitive questions in surveys. *Psychological Bulletin*, 133(5):859–883, 2007. ISSN 0033-2909. doi:10.1037/0033-2909.133.5.859. Page 10

Tripathi, Manoj, Jaya Narayan Sahu, and P. Ganesan. Effect of process parameters on production of biochar from biomass waste through pyrolysis: A review. *Renewable and Sustainable Energy Reviews*, 55:467–481, March 2016. ISSN 1364-0321. doi:10.1016/j.rser.2015.10.122. Page 34

Vandecasteele, Bart, Tania Sinicco, Tommy D'Hose, Thijs Vanden Nest, and Claudio Mondini. Biochar amendment before or after composting affects compost quality and N losses, but not P plant uptake. *Journal of Environmental Management*, 168:200–209, March 2016. ISSN 0301-4797. doi:10.1016/j.jenvman.2015.11.045. Pages 1 and 62

Velghe, Filip. Personal communication, 2015. Organic Waste Systems (OWS nv), Gent, Belgium. Pages 62 and 66

Vochozka, Marek, Anna Maroušková, Jan Váchal, and Jarmila Straková. Biochar pricing hampers biochar farming. *Clean Technologies and Environmental Policy*, February 2016. ISSN 1618-9558. doi:10.1007/s10098-016-1113-3. Page 85

von Bertalanffy, Ludwig. *General system theory: foundations, development, applications.* George Braziller, New York, rev. ed., 13. paperback edition, 2001. ISBN 978-0-8076-0453-3. Page 15

Wang, Cheng, Haohao Lu, Da Dong, Hui Deng, PJ Strong, Hailong Wang, and Weixiang Wu. Insight into the effects of biochar on manure composting: Evidence supporting the relationship between $N_2O$ emission and denitrifying community. *Environmental Science & Technology*, 47(13):7341–7349, 2013. Page 52

Wei, Yongjie and Yangsheng Liu. Effects of sewage sludge compost application on crops and cropland in a 3-year field study. *Chemosphere*, 59(9):1257–1265, July 2005. Page 47

Weiland, Peter, Burga Gemmeke, Christa Rieger, Jens Schröder, Vincent Plogsties, Jochen Vogtherr, Rainer Kissel, Hans Bachmaier, and Britt Schumacher. *Biogas-Messprogramm II – 61 Biogasanlagen im Vergleich.* Fachagentur Nachwachsende Rohstoffe e.V. (FNR), Gülzow, 1. edition, 2009. ISBN 978-3-9803927-8-5. Page 82

Wiedner, Katja, Jens Schneeweiß, Michaela A. Dippold, and Bruno Glaser. Anthropogenic Dark Earth in Northern Germany – The Nordic Analogue to terra preta de Índio in Amazonia. *CATENA*, 132:114–125, September 2015. ISSN 0341-8162. doi:10.1016/j.catena.2014.10.024. Page 34

Wrobel-Tobiszewska, Anna, Mark Boersma, J.E. Sargison, P. Adams, and S. Jarick. An economic analysis of biochar production using residues from Eucalypt plantations. *Biomass and Bioenergy*, 81:177–182, October 2015. ISSN 0961-9534. doi:10.1016/j.biombioe.2015.06.015. Page 80

Xiang-Dong, Huang and Xue Dong. Effects of bamboo biochar addition on temperature rising, dehydration and nitrogen loss during pig manure composting. *Yingyong Shengtai Xuebao*, 25(4), 2014. Pages 46 and 62

Yenigün, Orhan and Burak Demirel. Ammonia inhibition in anaerobic digestion: A review. *Process Biochemistry*, 48(5-6):901–911, May 2013. ISSN 1359-5113. doi:10.1016/j.procbio.2013.04.012. Page 65

Yoshizawa, Shuji, Satoko Tanaka, Michio Ohata, Shigeru Mineki, Sumio Goto, Kenji Fujioka, and Toshie Kokubun. Composting of food garbage and livestock waste containing biomass charcoal. In *Proceedings of the International Conference and Natural Resources and Environmental Management*, volume 8, page 2011, 2005. URL `http://www.geocities.jp/yasizato/Yoshizawa6.pdf`. Pages 46 and 62

Yoshizawa, Shuji, Satoko Tanaka, Michio Ohata, Shigeru Mineki, Sumio Goto, Kenji Fujioka, and Toshie Kokubun. Promotion effect of various charcoals on the proliferation of composting microorganisms. *TANSO*, 2006(224):261–265, 2006. doi:10.7209/tanso.2006.261. Pages 46 and 62

Zdanevitch, Isabelle. Etude comparative de la qualité de composts et de digestats issus de la fraction fermentescible d'ordures ménagères, collectée séparément ou en mélange. Technical Report N°INERIS- DRC-12-125976-02525B, INERIS, 2012. Page 58